Mini Fuses

小型熔断器

- 陶瓷管、玻璃管、塑料壳
- 快断与慢断
- 额定电流：（0.1 ~ 50）A
- 额定电压：（125 ~ 600）VAC，（24 ~ 600）VDC
- 低分断与高分断
- 无铅，符合RoHS＆REACH要求

- Ceramic Tube, Glass Tube, Plastic Case
- Fast Acting and Time-Lag
- Rated Current: (0.1 ~ 50) A
- Rated Voltage: (125 ~ 600) VAC, (24 ~ 600) VDC
- Low and High Breaking Capacity
- Lead-free (Pb-free), RoHS & REACH Compliant

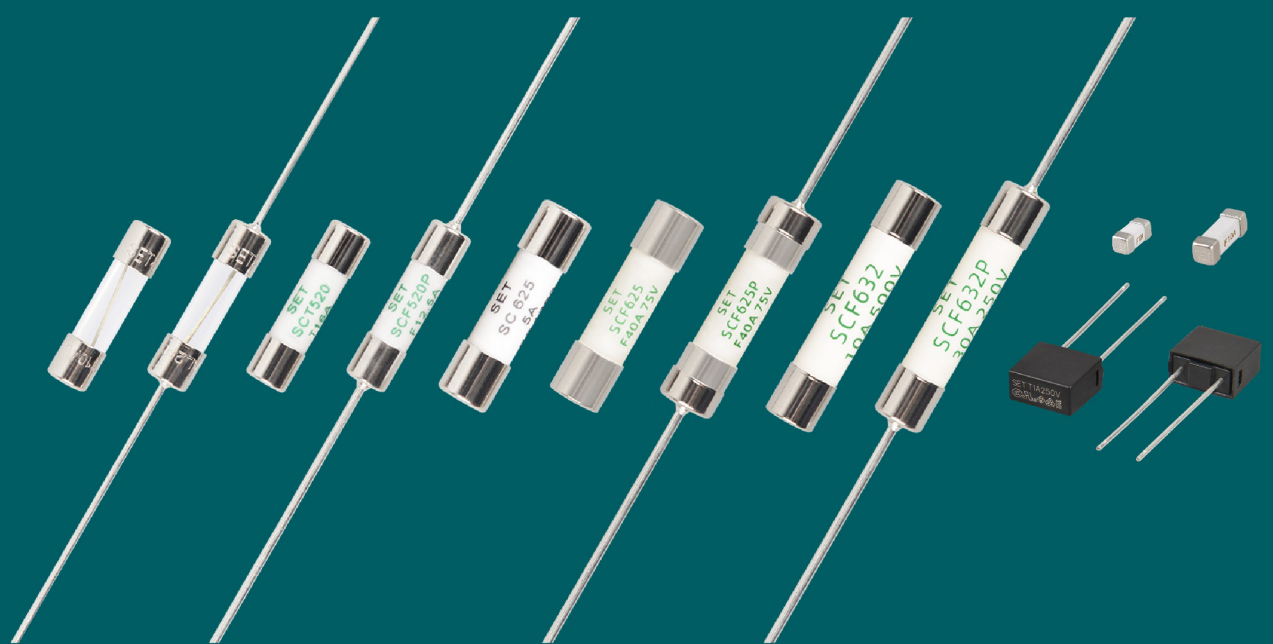

SET safe | SET fuse

赛尔特

制造电路控制及安全保护元器件 提供电路安全解决方案

Providing a Total Solution for High Standard Safety Circuit Protection

管状熔断体
Cartridge Fuse-links (CFL)

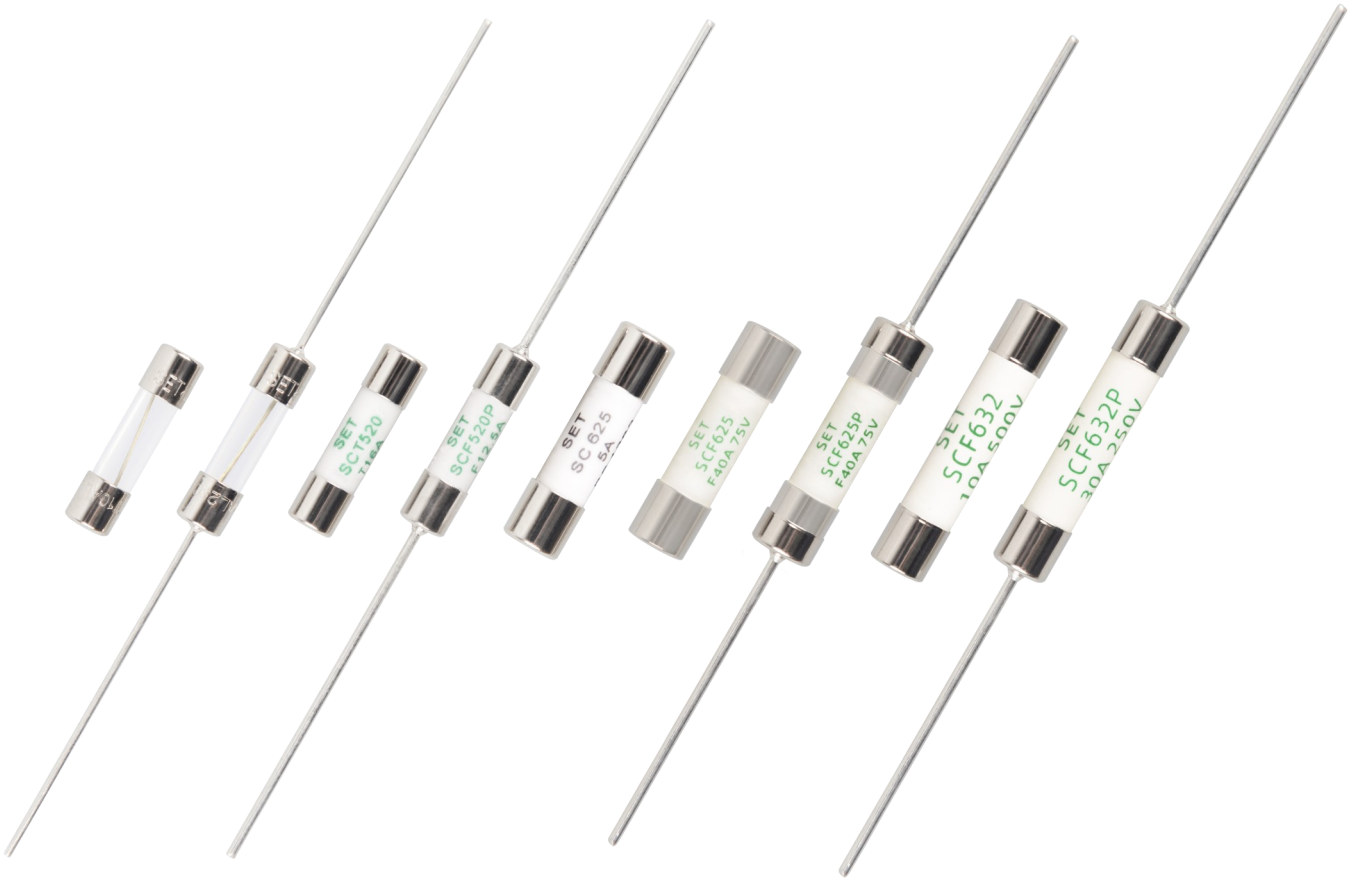

Miniature Fuses

特征 Features

- 陶瓷管、玻璃管 — Ceramic Tube, Glass Tube
- 快断与慢断 — Fast Acting and Time-Lag
- 额定电流：(0.4 ~ 50) A — Rated Current: (0.4 to 50) A
- 额定电压：(125 ~ 600) VAC — Rated Voltage: (125 to 600) VAC
  (75 ~ 600) VDC — (75 to 600) VDC
- 低分断与高分断 — Low and High Breaking Capacity
- 无铅且符合RoHs＆REACH要求 — Lead-free (Pb-free), RoHS & REACH Compliant

厦门赛尔特电子有限公司版权所有
All Rights Reserved by Xiamen SET Electronics Co., Ltd. 2021-2023 V2.2

管状熔断体特性与型号概览
Cartridge Fuse-links (CFL) Features & Model List Overview

额定电流 Rated Current (A)	14	14	17	17
50.00	○	○	SCF625F50A	SSCF625PF50A
40.00	○	○	SCF625F40A	SCF625PF40A
30.00	SCF63230A	SCF632P30A	SCF625F30A	SCF625PF30A
25.00	SCF63225A	SCF632P25A	SCF625F25A	SCF625PF25A
21.00	SCF63221A	SCF632P21A	○	○
20.00	SCF63220A	SCF632P20A	SCF625F20A	SCF625PF20A
16.00	SCF63216A	SCF632P16A	SCF625F16A	SCF625PF16A
15.00	SCF63215A	SCF632P15A	SCF625F15A	SCF625PF15A
13.00	○	○	○	○
12.50	SCF63212.5A	SCF632P12.5A	SCF625F12.5A	SCF625PF12.5A
12.00	SCF63212A	SCF632P12A	SCF625F12A	SCF625PF12A
10.00	SCF63210A	SCF632P10A	SCF625F10A	SCF625PF10A
8.00	SCF6328A	SCF632P8A	SCF625F8A	SCF625PF8A
7.00	○	○	○	○
6.30	SCF6326.3A	SCF632P6.3A	SCF625F6.3A	SCF625PF6.3A
6.00	SCF6326A	SCF632P6A	SCF625F6A	SCF632PF6A
5.00	SCF6325A	SCF632P5A	SCF625F5A	SCF625PF5A
4.00	SCF6324A	SCF632P4A	○	○
3.15	SCF6323.15A	SCF632P3.15A	○	○
3.00	○	○	○	○
2.50	SCF6322.5A	SCF632P2.5A	○	○
2.00	SCF6322A	SCF632P2A	○	○
1.60	SCF6321.6A	SCF632P1.6A	○	○
1.25	SCF6321.25A	SCF632P1.25A	○	○
1.00	SCF6321A	SCF632P1A	○	○
0.80	○	○	○	○
0.63	○	○	○	○
0.50	○	○	○	○
0.40	○	○	○	○
0.315	○	○	○	○
0.25	○	○	○	○
0.20	○	○	○	○
0.16	○	○	○	○
0.125	○	○	○	○
0.10	○	○	○	○
U_r(VAC)(VDC) 额定电压 Rated Voltage	(250 ~ 600) VAC / VDC		250 VAC / (75 ~ 400) VDC	
时间特性 Time Feature	/		快断 Fast Acting	
管身材质 Tube Material	陶瓷 Ceramic			
标准 Standards	UL			
分断能力 Breaking Capacity	1500 A ~ 50 kA 高 High		300 A ~ 10 kA 高 High	
外形尺寸(mm) Physical Size	Φ6.35 × 31.8		Φ6.35 × 25.4	
产品结构 Product Structure	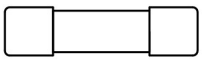		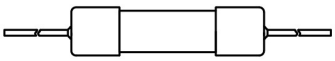	

页码 Page

型号 Model

Miniature Fuses

厦门赛尔特电子有限公司版权所有
All Rights Reserved by Xiamen SET Electronics Co., Ltd. 2021-2023 V2.2

管状熔断体特性与型号概览
Cartridge Fuse-links (CFL) Features & Model List Overview

额定电流 Rated Current (A)	20	22	25
50.00	○	○	○
40.00	○	○	○
30.00	○	○	○
25.00	○	○	○
21.00	○	○	○
20.00	○	SGF520-20A	SGT520-20A
16.00	○	SGF520-16A	SGT520-16A
15.00	○	SGF520-15A	SGT520-15A
13.00	SC625FM13A	○	○
12.50	○	SGF520-12.5A	SGT520-12.5A
12.00	○	SGF520-12A	SGT520-12A
10.00	SC625FM10A	SGF520-10A	SGT520-10A
8.00	○	SGF520-8A	SGT520-8A
7.00	SC625FM7A	○	○
6.30	○	SGF520-6.3A	SGT520-6.3A
6.00	○	○	○
5.00	SC625FM5A	SGF520-5A	SGT520-5A
4.00	○	SGF520-4A	SGT520-4A
3.15	○	SGF520-3.15A	SGT520-3.15A
3.00	SC625FM3A	○	○
2.50	○	SGF520-2.5A	SGT520-2.5A
2.00	○	SGF520-2A	SGT520-2A
1.60	○	SGF520-1.6A	SGT520-1.6A
1.25	○	SGF5201.25A	SGT520-1.25A
1.00	○	SGF520-1A	SGT520-1A
0.80	○	SGF520-800mA	SGT520-800mA
0.63	○	SGF520-630mA	SGT520-630mA
0.50	○	SGF520-500mA	SGT520-500mA
0.40	○	○	○
0.315	○	○	○
0.25	○	○	○
0.20	○	○	○
0.16	○	○	○
0.125	○	○	○
0.10	○	○	○
页码 Page / 型号 Model			

$U_{r(VAC)(VDC)}$ 额定电压 Rated Voltage	264 VAC	250 VAC	
时间特性 Time Feature	慢断 Time-Lag	快断 Fast Acting	慢断 Time-Lag
管身材质 Tube Material	陶瓷 Ceramic	玻璃 Glass	
标准 Standards	IEC / BS	IEC / UL	
分断能力 Breaking Capacity	6 kA	35 A ~ 200 A 低 Low	
外形尺寸(mm) Physical Size	Φ6.35 × 25.4	Φ5 × 20	
产品结构 Product Structure	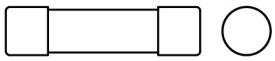	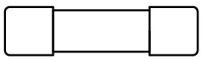	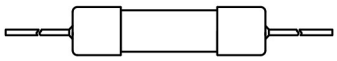

Miniature Fuses

厦门赛尔特电子有限公司版权所有
All Rights Reserved by Xiamen SET Electronics Co., Ltd. 2021-2023 V2.2

管状熔断体特性与型号概览
Cartridge Fuse-links (CFL) Features & Model List Overview

额定电流 Rated Current (A)	28	28	31	31
50.00	○	○	○	○
40.00	○	○	○	○
30.00	○	○	SCT520T30A	SCT520PT30A
25.00	SCF520F25A	SCF520PF25A	SCT520T25A	SCT520PT25A
21.00	○	○	○	○
20.00	SCF520F20A	SCF520PF20A	SCT520T20A	SCT520PT20A
16.00	SCF520F16A	SCF520PF16A	SCT520T16A	SCT520PT16A
15.00	SCF520F15A	SCF520PF15A	SCT520T15A	SCT520PT15A
13.00	○	○	○	○
12.50	SCF520F12.5A	SCF520PF12.5A	SCT520T12.5A	SCT520PT12.5A
12.00	SCF520F12A	SCF520PF12A	SCT520T12A	SCT520PT12A
10.00	SCF520F10A	SCF520PF10A	SCT520T10A	SCT520PT10A
8.00	SCF520F8A	SCF520PF8A	SCT520T8A	SCT520PT8A
7.00	○	○	○	○
6.30	SCF520F6.3A	SCF520PF6.3A	SCT520T6.3A	SCT520PT6.3A
6.00	○	○	○	○
5.00	SCF520F5A	SCF520PF5A	SCT520T5A	SCT520PT5A
4.00	SCF520F4A	SCF520PF4A	SCT520T4A	SCT520PT4A
3.15	SCF520F3.15A	SCF520PF3.15A	SCT520T3.15A	SCT520PT3.15A
3.00	SCF520F3A	SCF520PF3A	SCT520T3A	SCT520PT3A
2.50	SCF520F2.5A	SCF520PF2.5A	SCT520T2.5A	SCT520PT2.5A
2.00	SCF520F2A	SCF520PF2A	SCT520T2A	SCT520PT2A
1.60	SCF520F1.6A	SCF520PF1.6A	SCT520T1.6A	SCT520PT1.6A
1.25	SCF520F1.25A	SCF520PF1.25A	SCT520T1.25A	SCT520PT1.25A
1.00	SCF520F1A	SCF520PF1A	SCT520T1A	SCT520PT1A
0.80	SCF520F800mA	SCF520PF800mA	SCT520T800mA	SCT520PT800mA
0.63	SCF520F630mA	SCF520PF630mA	SCT520T630mA	SCT520PT630mA
0.50	SCF520F500mA	SCF520PF500mA	SCT520T500mA	SCT520PT500mA
0.40	SCF520F400mA	SCF520PF400mA	SCT520T400mA	SCT520PT400mA
0.315	○	○	○	○
0.25	○	○	○	○
0.20	○	○	○	○
0.16	○	○	○	○
0.125	○	○	○	○
0.10	○	○	○	○
页码 Page				
型号 Model				
U_r(VAC)(VDC) 额定电压 Rated Voltage	(125 ~ 600) VAC / VDC		(125 ~ 500) VAC / VDC	
时间特性 Time Feature	快断 Fast Acting		慢断 Time-Lag	
管身材质 Tube Material	陶瓷 Ceramic			
标准 Standards	IEC / UL			
分断能力 Breaking Capacity	500 A ~ 1500 A 高 High			
外形尺寸(mm) Physical Size	Φ5 × 20			
产品结构 Product Structure	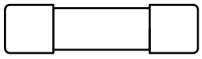		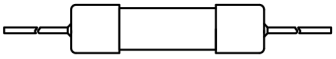	

Miniature Fuses

厦门赛尔特电子有限公司版权所有
All Rights Reserved by Xiamen SET Electronics Co., Ltd. 2021-2023 V2.2

产品描述 Description

小型熔断器(Miniature Fuses)是一种小型的过电流保护装置。它串联在电路中，一般要求电阻小（功耗小），当电路正常工作时，它相当于一根导线，能够长时间稳定地导通电路；当电路不稳定或外部干扰而发生电流波动时，它也应能承受一定范围的过载；只有当电路中出现明显的过载或短路时，小型熔断器(Miniature Fuses)才会动作，通过切断电流来保护电路。
赛尔特公司的小型熔断器(Miniature Fuses)广泛应用于各种电子电器设备的过电流保护，其具有多种安装方式、结构紧凑、性能可靠稳定等特点。赛尔特可提供的小型熔断器(Miniature Fuses)的技术参数：额定电流（0.1~40）A，额定电压（125~600）VAC、（24~600）VDC，安规认证包括cURus、VDE、PSE、CCC、CQC、KC、TUV，同时满足RoHS、REACH要求。

Miniature Fuses is an Over Current Protection device. It is connected in series in the circuit and generally requires low resistance (low power consumption). When the circuit works normally, it is equivalent to a wire, which can conduct the circuit continuously and stably. When the current fluctuates due to circuit instability or external interference, it should also be able to withstand a certain range of overload. Only when overload or short circuit happens, Miniature Fuses can blow fast to protect the circuit.
SETsafe | SETfuse Miniature Fuses is widely used in all kinds of electrical equipment. It has a variety of mounting modes, compact structure, reliable and stable performance. Technical parameters of SETsafe | SETfuse Miniature Fuses: Its rated current ranges from 0.1 A to 40 A, rated voltage ranges from 125 VAC to 600 VAC, and from 24 VDC to 600 VDC, complies with RoHS and REACH, and is approved by cURus, VDE, PSE, CCC, CQC, KC, TUV.

Miniature Fuses

厦门赛尔特电子有限公司版权所有
All Rights Reserved by Xiamen SET Electronics Co., Ltd. 2021-2023 V2.2

术语 Glossary

项目 Item	描述 Description
熔断器 **Fuse**	一种装置，当通过该装置的电流超过规定值，并持续足够的时间，该装置中一个或多个经特殊设计、特殊配比的部件熔断，断开其所接入的电路，从而切断电流。 A device, by the fusing of one or more of its specially designed and proportioned components, opens the circuit in which it is inserted by breaking the current when this exceeds a given value for a sufficient time. —(IEC 60127)
快断型熔断器 **Fast Acting Fuse**	在过载和短路时能很快断开电路的一类熔断器。这类熔断器无法承受一些超载浪涌电流。UL认证或认可的速断型熔断器，通常在额定电流的200%到250%时，会在5秒内断开。IEC标准有两类快断型熔断器： A fuse which opens on overload and short circuits very quickly. This type of fuse is not designed to withstand temporary overload currents associated with some electrical load. UL listed or recognized fast acting fuses would typically open within 5 s when subjected to 200% to 250% of its rated current. IEC has two categories of fast acting fuses: ● F表示快速动作，10倍额定电流时，能在0.001 s到0.01 s之间断开。 F = Fast acting, opens on 10 times rated current within 0.001 s to 0.01 s. ● FF表示非常快速动作,10倍额定电流时，能在0.001 s以内断开。 FF = Very fast acting, opens on 10 times rated current within less than 0.001 s. —(UL 248)
延时型熔断器 **Time-Lag Fuse**	内置时间延迟，允许暂时的、无害的浪涌电流通过而不动作的一类熔断器。在设计时持续过载和短路电流情况下的断开时间应该是：UL认证或认可的延时型熔断器在额定电流的200%到250%下，会在2分钟内断开。IEC标准有两种延时型熔断器： A fuse with a built-in delay that allows temporary and harmless inrush currents to pass without operating. In design, the breaking time under the condition of continuous overload and short-circuit current shall be: UL listed or recognized time delay fuses typically open in 2 minutes Max. when subjected to 200% to 250% of rated current. IEC has two categories of time delay fuses: ● T表示延时，10倍额定电流时，能在0.01 s到0.3 s之间断开。 T = Time-Lag, opens on 10 times rated current within 0.01 s to 0.3 s. ● TT表示长延时，10倍额定电流时，能在0.1 s到1 s之间断开。 TT = Long Time-Lag, opens on 10 times rated current within 0. 1 s to 1 s. —(UL 248)
额定电流 **Rated Current**	熔断器的额定电流是根据其可控制测试条件的截流能力确定的。每个熔断器上都应标上额定电流，它可以是数字、字母、或色码。 The rated current of a fuse identifies its current-carrying capacity based on a controllable set of test conditions. Each fuse is marked with its rated current, this rating can be identified with a numeric, alpha, or color code mark. —(IEC 60127)
额定电压 **Rated Voltage**	熔断器可以使用的最大安全开断电压，超过额定电压将影响断开过载和短路电路的能力。 A Max. open circuit voltage in which a fuse can be used, yet safely interrupt an overcurrent. Exceeding the voltage rating of a fuse impairs its ability to clear an overload or short circuit safely. —(IEC 60127)

Miniature Fuses

厦门赛尔特电子有限公司版权所有
All Rights Reserved by Xiamen SET Electronics Co., Ltd. 2021-2023 V2.2

术语 Glossary

项目 Item	描述 Description
正常工作电流 **Normal Operating Current**	正常条件下接通电路后，电路中流过的电流被称为正常工作电流。在25 °C的条件下，正常工作电流应小于等于80%的额定电流。例如，额定电流为1 A的熔断器不推荐在大于800 mA的电路中使用。如果环境温度较高，则需进一步降额使用。 The normal operating current of a circuit is the level of current drawn (in RMS or dc amperes) after it has been energized and is operating under normal conditions. An operating current of 80% or less of rated current is recommended for operation at 25 °C to avoid nuisance openings. For example, a fuse with a Rated Current of 1 A is usually not recommended in circuits with normal operating currents of more than 800 mA. Further derating is required at elevated ambient Temp.. —(UL 248)
标称熔化热能 **Ampere Squared Seconds I^2t**	在电流平方对给定时间间隔的积分，被称为I^2t。它是熔断所需的热能。熔断I^2t可以是熔化I^2t，飞弧I^2t，或二者之和。 The melting, arcing, or clearing integral of a fuse, termed I^2t, is the thermal energy required to melt, arc, or clear a specific current. It can be expressed as melting I^2t, arcing I^2t or the sum of them, clearing I^2t. —(IEC 60127)
过载 **Overload**	电流超过额定负荷的2到5倍，且保持正常的电流路径。 Can be classified as an overcurrent which exceeds the normal full load current of a circuit by 2 to 5 times its magnitude and stays within the normal current path. —(UL 248)
过电流 **Overcurrent**	在一个电路中，超过正常负载电流的电流称为过电流。过电流包括过载电流和短路电流。 A condition which exists in an electrical circuit when the normal load current is exceeded. Overcurrent take on two separate characteristics-overloads and short circuits. —(UL 248)
短路 **Short Circuit**	将短路是电流不流过正常电路而引起的过电流，它大大超出了正常满载电流数十、数百甚至数千倍。 An overcurrent that leaves the normal current path and greatly exceeds the normal full load current of the circuit by a factor of tens, hundreds, or thousands times. —(UL 248)
飞弧时间 **Arcing Time**	从出现电弧的瞬间到最终电弧熄灭的瞬间所间隔的时间。 The amount of time from the instant the fuse link has melted until the overcurrent is interrupted, or cleared. —(IEC 60127)
熔断时间 **Clearing Time**	熔化时间和飞弧时间之和。 The total time between the beginning of the overcurrent and the final opening of the circuit at rated voltage by an overcurrent protective device. Clearing time is the total of the melting time and the arcing time. —(IEC 60127)
分断能力 **Breaking Capacity of a Fuse-link**	在规定的使用和性能条件下，熔断器在规定电压下能分断的预期电流值（对交流为有效值）。 Value (r.m.s. for AC) of prospective current that a fuse-link is capable of breaking at a stated voltage under prescribed conditions of use and behaviour. —(IEC 60127)

Miniature Fuses

厦门赛尔特电子有限公司版权所有
All Rights Reserved by Xiamen SET Electronics Co., Ltd. 2021-2023 V2.2

过电流保护选型 Selection Guide Of Overcurrent Protection

在正常负载条件下，熔断器必须在电路中正常工作。然而，当过电流时熔断器必须断开电路和承受内部电弧。

Under normal load conditions, the fuse must carry the normal operating current of the circuit without nuisance openings. However, when an overcurrent occurs, the fuse must interrupt the overcurrent and withstand the voltage across the fuse after internal arcing.

正确选择熔断器必须考虑以下项目:

To properly select a fuse, the following items must be considered:

- 额定电压（交流或直流） Rated Voltage (AC or DC)
- 额定电流 Rated Current
- 正常工作电流 Normal Operating Current
- 环境温度 Ambient Temp.
- 过载条件和熔断时间 Overload Conditions and Opening Time
- 短路电流 Available Short Circuit Current
- 熔化热能值 Ampere Squared Seconds(I^2t)
- 脉冲和浪涌特性 Pulse and Inrush Characteristics
- 被保护设备或部件的特性 Characteristics of Protected Equipment or Components
- 安装空间和外形尺寸 Available Board Space and Physical Size
- 标准要求 Standards Requirements

Miniature Fuses

选型流程 Selection Process

步骤 Procedure	解释 Explanation
开始 Start	准备相关设计信息。 Prepare related design information.
安规认证 Safety Approval	根据整机所需的安规认证决定熔断器的安规认证，在此，可初步确定选用IEC规格或UL规格熔断器。 The safety approvals of the fuse shall be determined by the requirement of the end product. Therefore, it is determined preliminarily to choose fuse of IEC standard or UL standard.
尺寸 Dimensions	● 设计时电路中空间的限制。 The space limit of circuit in design. ● 安装方式。 Mounting mode.
额定电压 Rated Voltage	额定电压应大于等于有效的电路电压。 The rated voltage of the fuse shall be greater than, or equal to the effective circuit voltage.
分断能力 Breaking Capacity	分断能力的电流应大于电路中的最大故障电流。 The Breaking Capacity of the fuse should exceed the max. fault current of the circuit.

厦门赛尔特电子有限公司版权所有
All Rights Reserved by Xiamen SET Electronics Co., Ltd. 2021-2023 V2.2

初步选择型号 Initial Selection for Fuse Type	整机开关机时，电路中是否存在开机浪涌？开机浪涌在某些电路中是正常的，这种场合应使用慢断型。 Is there inrush current in the circuit when the machine is turned on and off? In some circuit, the inrush current is normal, so time-lag fuse should be used in such case.
确定额定电流上限I_U Upper Limit for Rated Current I_U	熔断器必须切断的电流及持续时间（该条件由设计人员依具体电路的保护需求而定），参考相应型号的时间电流曲线，取满足要求的最大额定电流作为上限值I_U。 For the current that the fuse must cut off and its duration, please refer to the time-current curve of the corresponding model, and take the max. rated current, which meets the requirement, as the upper limit I_U. Such conditions are determined by the designer according to the protection requirement of the specific circuit.
确定额定电流下限 I_L Lower Limit for Rated Current I_L	● 通过熔断器的稳态电流（依具体电路而定）。 Steady state current through a fuse (based on the specific circuit). ● IEC规格及UL规格熔断器的额定电流的差别，参考“稳态电流”。 The difference of rated current for fuse designed to IEC standard and UL standard, refer to STEADY STATE CURRENT. ● 环境温度对熔断器承载能力的影响，参考“环境温度”。 Effect of ambient Temp. on current-carrying capacity of fuse, refer to AMBIENT TEMP.. ● 脉冲（冲击电流、浪涌电流、起动电流、及电流瞬变值等）对熔断器寿命的影响，参考“脉冲”。 Effect of pulse (including surge currents, starting current, inrush currents and transients) on life time of fuse, refer to PULSE. ● 起动电流及持续时间与相应型号的时间电流曲线比较。 “Starting current” and duration should be compared to time-current curve of corresponding fuse. 综合考虑以上5个因素后，选出满足要求的最小额定电流作为下限I_L。 According to the above 5 factors, to select the min. rated current which meets the requirement as the lower limit of I_L.
SET Mini Fuses具体型号及电流 SET Mini Fuses Model & Rated Current	综合考虑以上因素后，选出最合适的型号及额定电流。 According to the above factors, choose the most appropriate model and rated current. ● 当$I_U \geq I_L$时，则可选用I_L到I_U区间内的任何一规格的熔断器。 When $I_U \geq I_L$, any rating is workable from the range of I_L to I_U. ● 当$I_U < I_L$时，则建议选用其它型号的熔断器。 When $I_U < I_L$, recommend to select another type fuse.
验证 Verifying	样品应在实际电路中试运行。 The sample shall be pilot run in the actual circuit.
完成	

Miniature Fuses

厦门赛尔特电子有限公司版权所有
All Rights Reserved by Xiamen SET Electronics Co., Ltd. 2021-2023 V2.2

稳态电流 Steady State Current

在实际应用中和实验室之间有不同的条件，如：

There are different conditions in actual application and laboratory test, such as:

- 有时使用熔断器盒；
  Fuse-holder;
- 电路中的电线横截面积；
  Connecting cable size;
- 熔断器夹的接触电阻等。
  Contacting resistance between fuse clip and fuse, etc.

考虑到以上因素，故在25 °C条件下所选用的熔断器应满足如下条件才可使熔断器持续可靠地工作：

Considering above factors, when selecting a fuse at a 25 °C ambient Temp., to ensure the fuse operated continuously and properly, the following conditions shall be required:

- IEC规格：熔断器的额定电流I_N=稳态电流/0.9。
  Fuse designed to IEC standard: Rated Current (I_N) = steady state current of circuit/0.9.
- UL规格：熔断器的额定电流I_N=稳态电流/0.75。
  Fuse designed to UL standard: Rated Current (I_N) = steady state current of circuit/0.75.

环境温度 Ambient Temperature

熔断器的电流承载能力测试是在环境温度25 °C条件下进行的，而熔断器的电流承载能力是会受环境温度影响的。环境温度越高，熔断器的寿命越短，承载能力就越低。所以选用熔断器时应考虑熔断器周边的环境温度，环境温度对各类熔断器承载能力的影响如下图所示：

The current carrying capacity tests of a fuse are performed at 25 °C and will be effected by the changes of the ambient Temp.. The higher the ambient Temp. is, the shorter the fuse life time will be, and the lower the current carrying capacity will be. So the ambient Temp. shall be considered for proper fuse selection. Refer to the following charts showing its effect on the current carrying capacity of all kinds of fuse:

- 图1表示环境温度对传统慢断及中等慢断型熔断器承载能力及5I_N熔断时间的影响。
  Fig.1 effect on rating and opening time in 5I_N of traditional time-lag and medium Time-Lag fuse.
- 图2表示环境温度对快速熔断型熔断器承载能力及5I_N熔断时间的影响。
  Fig.2 effect on rating and opening time in 5I_N of fast acting fuse.

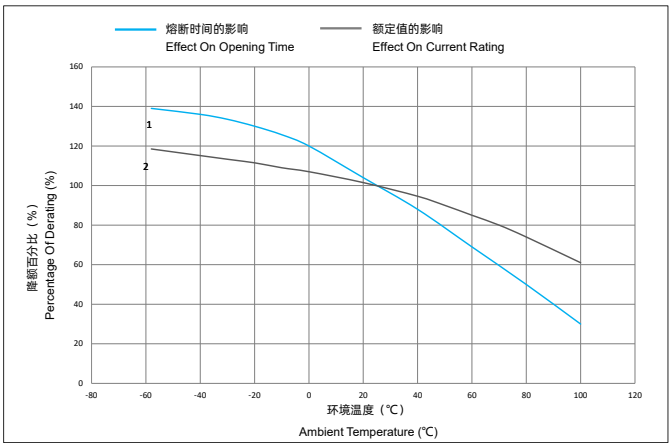

图1 FIGURE 1

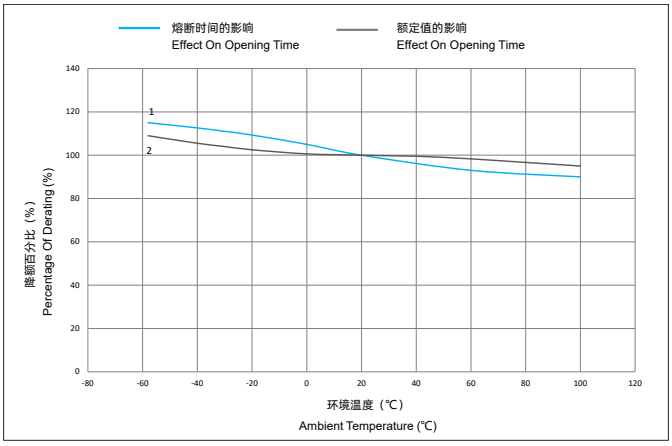

图2 FIGURE 2

脉冲 Pulse

脉冲产生的热循环，从而产生机械疲劳影响熔断器的寿命。设计时应使脉冲I^2t远远小于熔断器标称熔化热能I^2t。熔断器寿命（可承受的脉冲循环次数）与U（脉冲I^2t值与熔断器I^2t值之比率）的关系参照表A。表B提供各种典型脉冲波形的I^2t值近似计算公式：

Pulse produces thermal cycling and mechanical fatigue which could affect the life time of fuse. The selected fuse should have an I^2t value much greater than the I^2t value of pulse. Refer to Table A showing the relationship between the life time of fuse (the endurable times of pulse shock) and U (ratio between pulse I^2t value and fuse I^2t value). The I^2t value of a fuse presented in this catalog may be for your reference. The I^2t value of a pulse can be approximated from the following formulas for a typical wave shape, refer to Table B.

Miniature Fuses

厦门赛尔特电子有限公司版权所有
All Rights Reserved by Xiamen SET Electronics Co., Ltd. 2021-2023 V2.2

表1 TABLE 1

可承受脉冲次数 Endurable times of pulse shock	U（比率Ratio）
100000	20%
10000	30%
1000	40%

注：脉冲间隔时间必须足够长（5 s – 10 s），以利于脉冲产生的热量散失。

Note: Adequate interval (5 s - 10 s) must be required between pulse events to allow the heat from the previous event to dissipate.

表2 TABLE 2

波形 Wave Shape	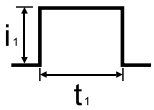 矩形波 Rectangle wave	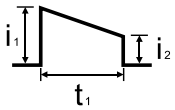 梯形波 Trapezoid wave	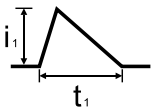 三角形波 Triangle wave	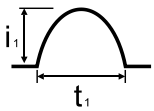 正弦波 Sine wave	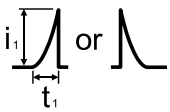 变形波 Distortion wave	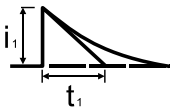 充、放电波 Charge or Discharge wave
I^2t计算公式 I^2t Formula	$i_1^2t_1$	$(1/3)(i_1^2+i_1i_2+i_2^2)t_1$	$(1/3)i_1^2t_1$	$(1/2)i_1^2t_1$	$(1/5)i_1^2t_1$	$(1/2)i_1^2t_1$

验证 Verifying

所选定的产品必须在实际被保护电路中进行测试，以验证所选择的熔断器。此验证应包括正常条件及故障条件下的测试，以确保所选择的熔断器在被保护电路中能正常运行。

The selected sample shall be tested in the actual circuit to verify the right selection. The testing should include the tests under normal and fault conditions to ensure that the fuse will operate properly in the circuit.

Miniature Fuses

厦门赛尔特电子有限公司版权所有
All Rights Reserved by Xiamen SET Electronics Co., Ltd. 2021-2023 V2.2

注意

ATTENTION

检测 Inspection

冷电阻测试 Cold Resistance Test

a. 环境温度为(23±2) °C，测试电流不大于熔断器额定电流的10%。

Applied current shall be less than 10% of rated current, at ambient Temp. of (23±2) °C.

b. 采用四端测试法 (4-Wire) Resistance Measurement.

使用 Usage

a. 通电情况下请勿直接触碰熔断器本体或引线，防止烫伤或触电。

Do not touch the fuse body or lead wire when power on, avoiding scald or electric shock.

b. 气压在80 kPa 到106 kPa，对应海拔为+2000 m至- 500 m。

Air pressure is 80 kPa to 106 kPa. These values represent an altitude of +2000 m to -500 m, respectively.

更换 Replacement

基于安全原因，熔断器是不可修复的产品，替换时应使用同类别同型号的产品。

For safety reasons, the Fuse is the non-resettable product, please ensure that the alternative Fuse is the same type when replace it.

贮存 Storage

熔断器的贮存应避免高温、高湿、日光直射和腐蚀性气体的场合，以免影响引脚可焊性，产品购入后请于1年内使用完毕。

Please store the fuse in the environment without high temperature, high humidity or corrosive gas, to avoid reducing the solderability of the lead wire. Please use them up within 1 year after receiving the goods.

厦门赛尔特电子有限公司版权所有
All Rights Reserved by Xiamen SET Electronics Co., Ltd. 2021-2023 V2.2

安装 Installation

机械应力 Mechanical stress

安装过程和安装后不宜对熔断器本体施加机械应力。

Do not apply mechanical stress to the fuse body during or after the installation.

焊接参数 Soldering Parameters

波峰焊参数 Wave soldering Parameters (仅供参考 For Reference Only)

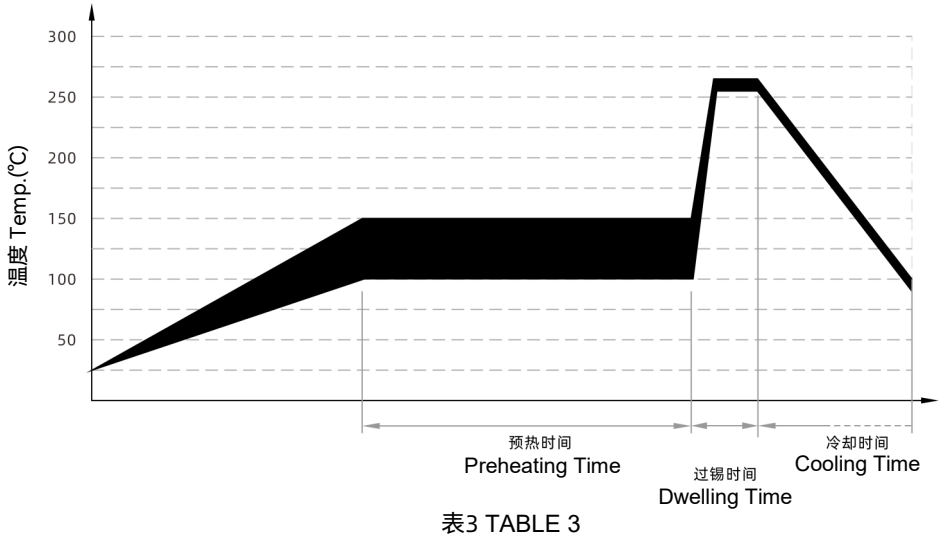

表3 TABLE 3

项目 Item	温度 Temp. （°C）	时间 Time （s）
预热 Preheating	100 - 150	60 - 180
过锡 Dwelling	255 - 265	4 - 8

推荐的手工焊参数 Recommended Soldering Parameters

烙铁温度 Solder Iron Temp.：(350 ± 5) °C

焊接时间 Soldering Time：≤ 5 s

引脚弯曲 Lead Wire Bending

如果要弯折引脚，那么应确保弯折处与主体间的距离，如下表。

If the lead wire has to be bent, please pay attention to the distance between body and the bending point. Refer to the following table.

表4 TABLE 4

轴向型 Axial Type			
d	≤ Φ1.0 mm	> Φ1.0 mm	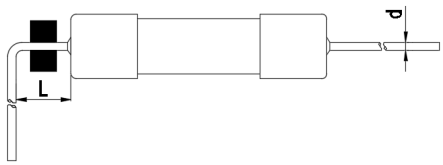
L	≥ 3 mm	≥ 5 mm	

安装位置 Installation Position

勿将熔断器安装在可能经常出现剧烈振动的位置。

Do not install the fuse on a location that may often subject to severe continuous vibration.

厦门赛尔特电子有限公司版权所有
All Rights Reserved by Xiamen SET Electronics Co., Ltd. 2021-2023 V2.2

尺寸 Dimensions (mm)

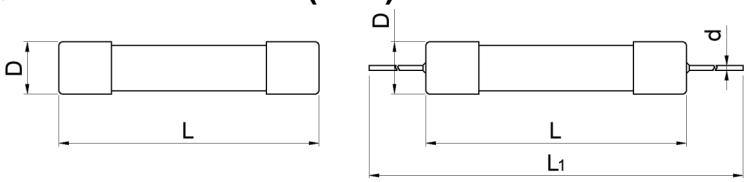

L	L_1	D	d
31.8 ± 1.0	108 ± 2	Φ6.35 ± 0.20	≤16 A: Φ0.80 ± 0.05 >16 A ~ 30 A: Φ1.00 ± 0.05

关键特性 Key Features

- 外形尺寸 Physical Size: Φ6.35 mm × 31.8 mm
- 高分断能力 High Breaking Capacity
- 陶瓷管结构 Ceramic Tube Construction
- 执行标准 Designed To UL 248-14
- 无铅 Lead-free (Pb-free)
- 环保型产品 RoHS & REACH Compliant

安规认证 Agency Approvals

安规认证 Agency Approvals	认证号 Agency File Number	电流范围 Ampere Range
c UL us	E345932	1 A ~ 30 A

应用 Applications

- 电源 Power Supply
- 家电 Household Appliance
- 防雷器 Surge Protective Device (SPD)
- 充电桩 Charging Pile
- 智能家居 Smart Home
- 办公设备 Office Equipment
- 电动工具 Electric Tool
- 医疗设备 Medical Equipment
- 仪器仪表 Instruments and Apparatuses

时间电流特性曲线 Time Current Curve

仅供参考 For Reference Only

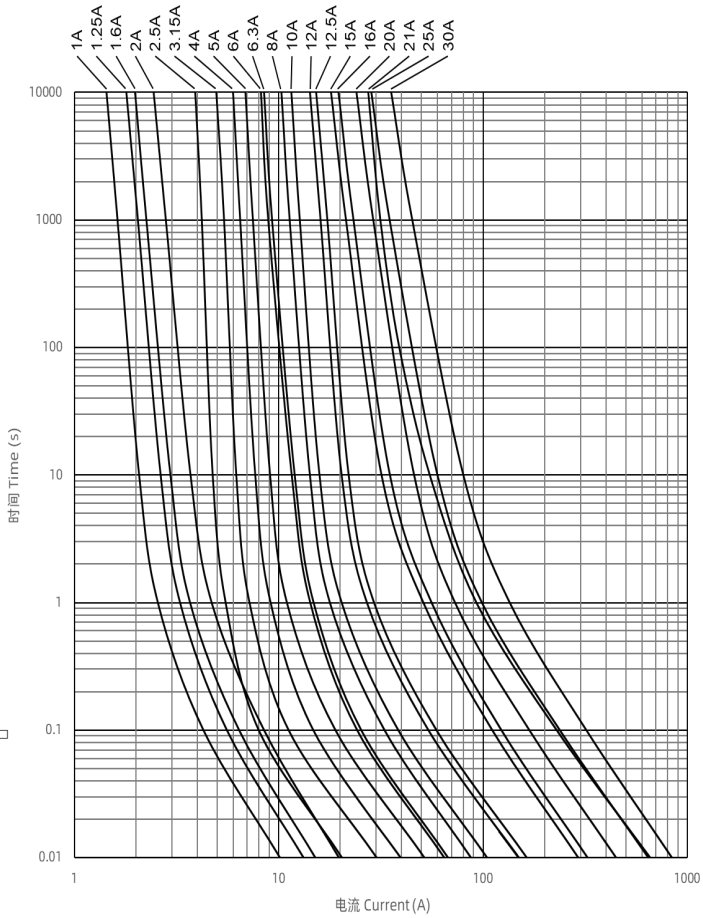

型号说明 Part Number System

SCF6321.25A250V

- 额定电压 Rated Voltage
- 额定电流 Rated Current
- 产品系列 Product Series
  - SCF632: 圆筒型 Cartridge Type
  - SCF632P: 带尾型 Axial Lead Type

结构图 Structure

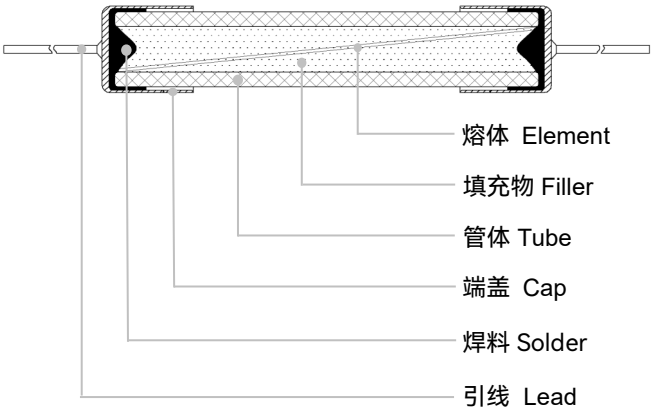

厦门赛尔特电子有限公司版权所有
All Rights Reserved by Xiamen SET Electronics Co., Ltd. 2021-2023 V2.2

Miniature Fuses

技术参数 Specifications

系列 Series	额定电流 Rated Current (A)	额定分断能力 Rated Breaking Capacity	平均熔化热能值 Average Typical Melting I^2t [a] (A^2sec)	安规认证 Agency Approvals cURus	环境 Environmental RoHS	环境 Environmental REACH
SCF632(P)	1	1500 A @ 250 VAC 10 kA @ 600 / 500 / 400 / 350 / 300 / 250 VAC 50 kA @ 600 / 500 / 400 / 350 / 300 / 250 VDC	1.11	●	●	●
SCF632(P)	1.25		1.87	●	●	●
SCF632(P)	1.6		2.24	●	●	●
SCF632(P)	2		3.85	●	●	●
SCF632(P)	2.5		4.03	●	●	●
SCF632(P)	3.15		9.13	●	●	●
SCF632(P)	4		15.7	●	●	●
SCF632(P)	5		26.7	●	●	●
SCF632(P)	6		42.5	●	●	●
SCF632(P)	6.3		45.5	●	●	●
SCF632(P)	8		78.6	●	●	●
SCF632(P)	10		116	●	●	●
SCF632(P)	12		220	●	●	●
SCF632(P)	12.5		284	●	●	●
SCF632(P)	15	1500 A @ 250 VAC 1000A @ 600 / 500 / 400 / 350 / 300 / 250 VAC 1000A @ 600 / 500 / 400 / 350 / 300 / 250 VDC	1010	●	●	●
SCF632(P)	16		1320	●	●	●
SCF632(P)	20		2680	●	●	●
SCF632(P)	21		6000	●	●	●
SCF632(P)	25		5430	●	●	●
SCF632(P)	30		10800	●	●	●

a: I^2t 是在10倍额定电流测试下得到的。I^2t value is measured at 10 I_N.

Miniature Fuses

厦门赛尔特电子有限公司版权所有
All Rights Reserved by Xiamen SET Electronics Co., Ltd. 2021-2023 V2.2

熔断特性 Pre-arcing Time/Current Characteristic

1.0 I_N	2.5 I_N
最快 Min.	最慢 Max.
60 minutes	30 minutes

包装信息 Packaging Information

尺寸 Dimensions (mm)

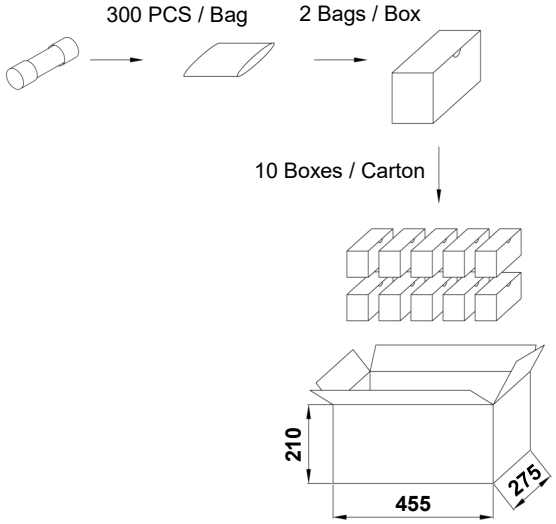

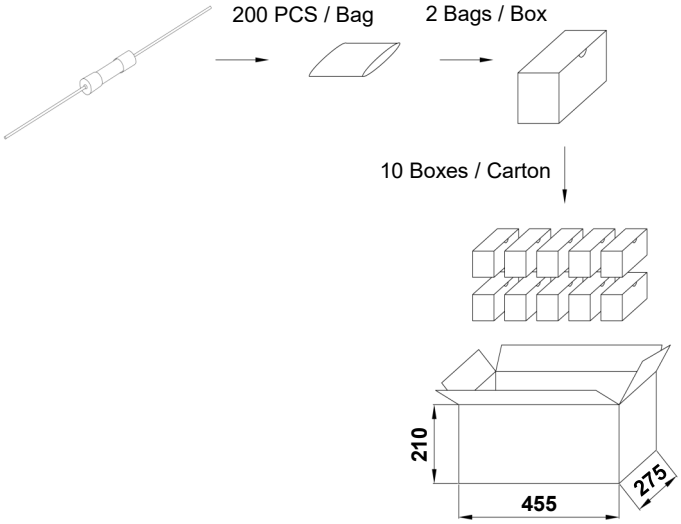

圆筒型 Cartridge Type			
项目 Item	PE袋 Bag	盒 Box	箱 Carton
数量 Q'ty (PCS)	300	600	6,000
毛重 Gross Weight (kg)		18.5 ± 10%	

带尾型 Axial Lead Type			
项目 Item	PE袋 Bag	盒 Box	箱 Carton
数量 Q'ty (PCS)	200	400	4,000
毛重 Gross Weight (kg)		13 ± 10%	

Miniature Fuses

厦门赛尔特电子有限公司版权所有
All Rights Reserved by Xiamen SET Electronics Co., Ltd. 2021-2023 V2.2

尺寸 Dimensions (mm)

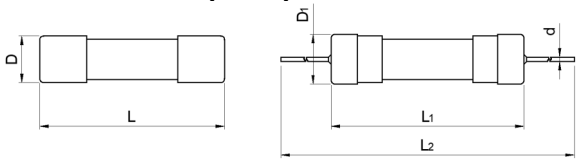

L	L_1	L_2	D	D_1	d
25.4 ± 1.0	26.5 ± 1.0	103 ± 2	Φ6.35 ± 0.20	Φ6.81± 0.30	≤16 A: Φ0.80 ± 0.05 >16 A ~ 30 A: Φ1.00 ± 0.05 >30 A: Φ1.20 ± 0.05

关键特性 Key Features

- 外形尺寸 Physical Size: Φ6.35 mm × 25.4 mm
- 高分断能力 High Breaking Capacity
- 快断 Fast Acting
- 陶瓷管结构 Ceramic Tube Construction
- 执行标准 Designed To UL 248-14
- 无铅 Lead-free (Pb-free)
- 环保型产品 RoHS & REACH Compliant

安规认证 Agency Approvals

安规认证 Agency Approvals	认证号 Agency File Number	电流范围 Ampere Range
c UL us	E345932	5 A ~ 50 A

应用 Applications

- 电源 Power Supply
- 家电 Household Appliance
- 防雷器 Surge Protective Device (SPD)
- 插座 Power Strips
- 智能家居 Smart Home
- 办公设备 Office Equipment
- 电动工具 Electric Tool
- 医疗设备 Medical Equipment
- 仪器仪表 Instruments and Apparatuses

时间电流特性曲线 Time Current Curve

仅供参考 For Reference Only

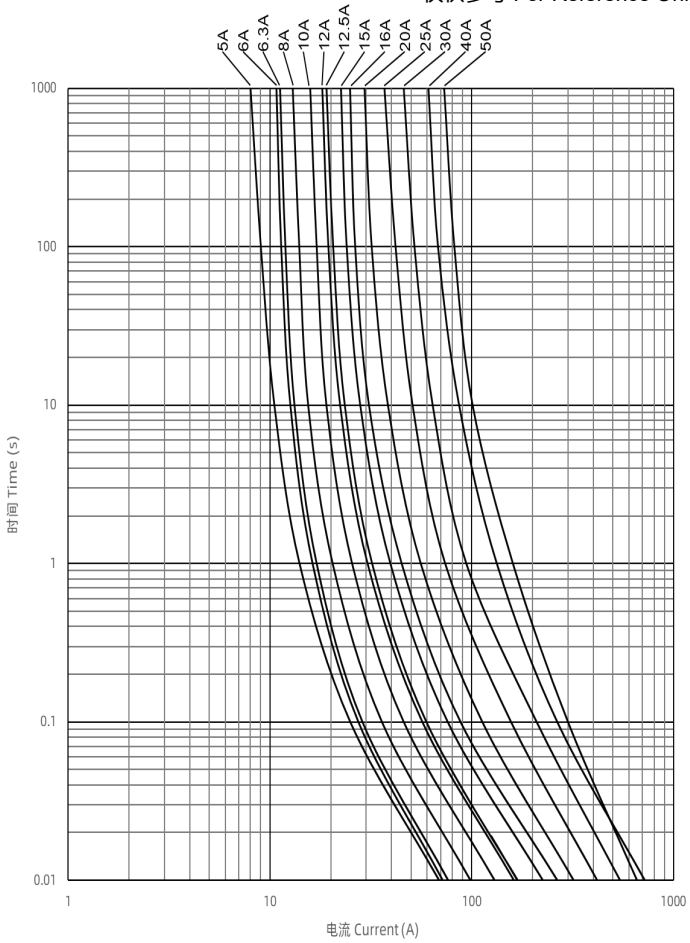

型号说明 Part Number System

SCF625F12.5A250V

- 额定电压 Rated Voltage
- 额定电流 Rated Current
- 快断 Fast Acting
- 产品系列 Product Series
  - SCF625: 圆筒型 Cartridge Type
  - SCF625P: 带尾型 Axial Lead Type

结构图 Structure

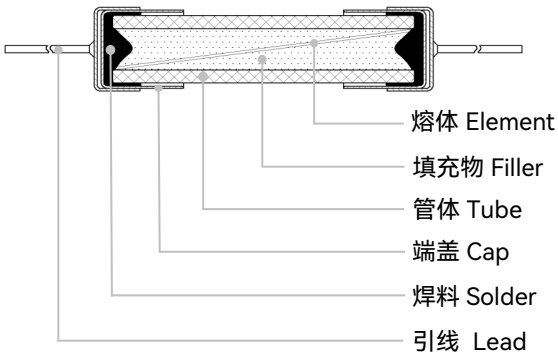

Miniature Fuses

厦门赛尔特电子有限公司版权所有
All Rights Reserved by Xiamen SET Electronics Co., Ltd. 2021-2023 V2.2

技术参数 Specifications

系列 Series	额定电流 Rated Current (A)	额定分断能力 Rated Breaking Capacity	平均熔化热能值 Average Typical Melting I^2t [a] (A^2sec)	安规认证 Agency Approvals cURus	环境 Environmental RoHS	环境 Environmental REACH
SCF625(P)	5	10 kA @ 250 VAC 2000 A @ 400 VDC 2500 A @ 75 VDC	50	●	●	●
SCF625(P)	6		48	●	●	●
SCF625(P)	6.3		59	●	●	●
SCF625(P)	8		100	●	●	●
SCF625(P)	10		160	●	●	●
SCF625(P)	12		265	●	●	●
SCF625(P)	12.5		285	●	●	●
SCF625(P)	15		460	●	●	●
SCF625(P)	16		660	●	●	●
SCF625(P)	20		1050	●	●	●
SCF625(P)	25	300 A @ 400 VDC 2500 A @ 75 VDC	2200	●	●	●
SCF625(P)	30		3650	●	●	●
SCF625(P)	40	2500 A @ 75 VDC	5595	●	●	●
SCF625(P)	50		5012	●	●	●

a: I^2t 是在10倍额定电流测试下得到的。I^2t value is measured at 10 I_N.

厦门赛尔特电子有限公司版权所有
All Rights Reserved by Xiamen SET Electronics Co., Ltd. 2021-2023 V2.2

Miniature Fuses

熔断特性 Pre-arcing Time/Current Characteristic

1.0 I_N	2.0 I_N	2.5 I_N	3.0 I_N
最快 Min.	最慢 Max.	最慢 Max.	最慢 Max.
4 h	120 s	30 s	5 s

包装信息 Packaging Information

尺寸 Dimensions (mm)

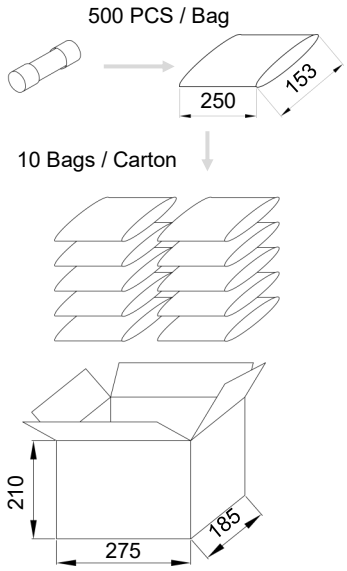

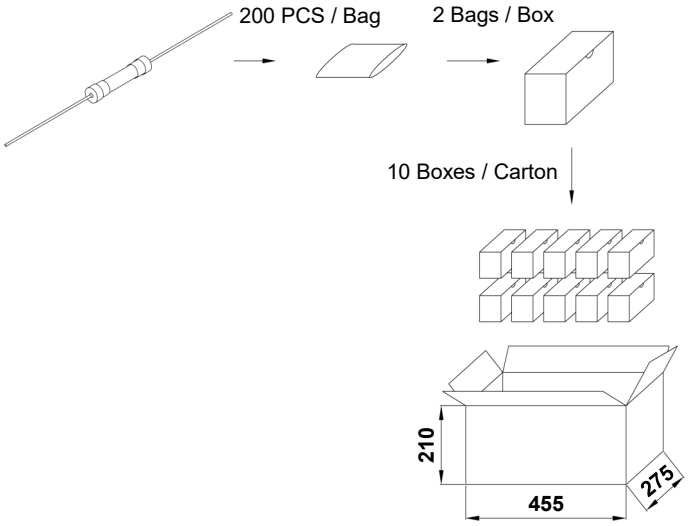

圆筒型 Cartridge Type		
项目 Item	PE袋 Bag	箱 Carton
数量 Q'ty (PCS)	500	5,000
毛重 Gross Weight (kg)		13.5 ± 10%

带尾型 Axial Lead Type			
项目 Item	PE袋 Bag	盒 Box	箱 Carton
数量 Q'ty (PCS)	200	400	4,000
毛重 Gross Weight (kg)		15.5 ± 10%	

Miniature Fuses

厦门赛尔特电子有限公司版权所有
All Rights Reserved by Xiamen SET Electronics Co., Ltd. 2021-2023 V2.2

尺寸 Dimensions (mm)

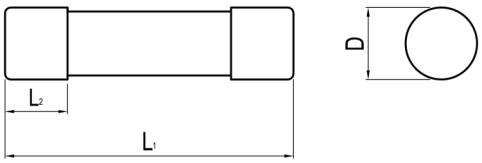

L_1	L_2	D
$25.4^{+0.8}_{-0.4}$	5.5 ± 0.8	$\Phi 6.3^{+0.20}_{-0.05}$

关键特性 Key Features

- 外形尺寸 Physical Size：Φ6.3 mm × 25.4 mm
- 中速熔断 Fast/Medium Acting
- 高分断 High Breaking Capacity
- 陶瓷管，镀镍黄铜帽结构
  Ceramic Tube, Nickel-plated Brass Endcap Construction
- 执行标准：BS 1362，IEC 60269-3 / 系统F，
  GB/T 13539.3 / 系统F
  Designed to BS 1362，IEC 60269-3 / System F,
  GB/T 13539.3 / System F
- 无铅 Lead-free (Pb-free)
- 环保型产品 RoHS & REACH Compliant

安规认证 Agency Approvals

安规认证 Agency Approvals	认证号 Agency File Number	电流范围 Ampere Range
CCC	待定 Pending	3 A ~ 13 A
ASTA	待定 Pending	3 A ~ 13 A

应用 Applications

- 英式插头 BS Plug
- 英式插座 BS Socket
- 家电 Household Appliance
- 智能家居 Smart Home
- 电缆 Cable

时间电流特性曲线 Time Current Curve

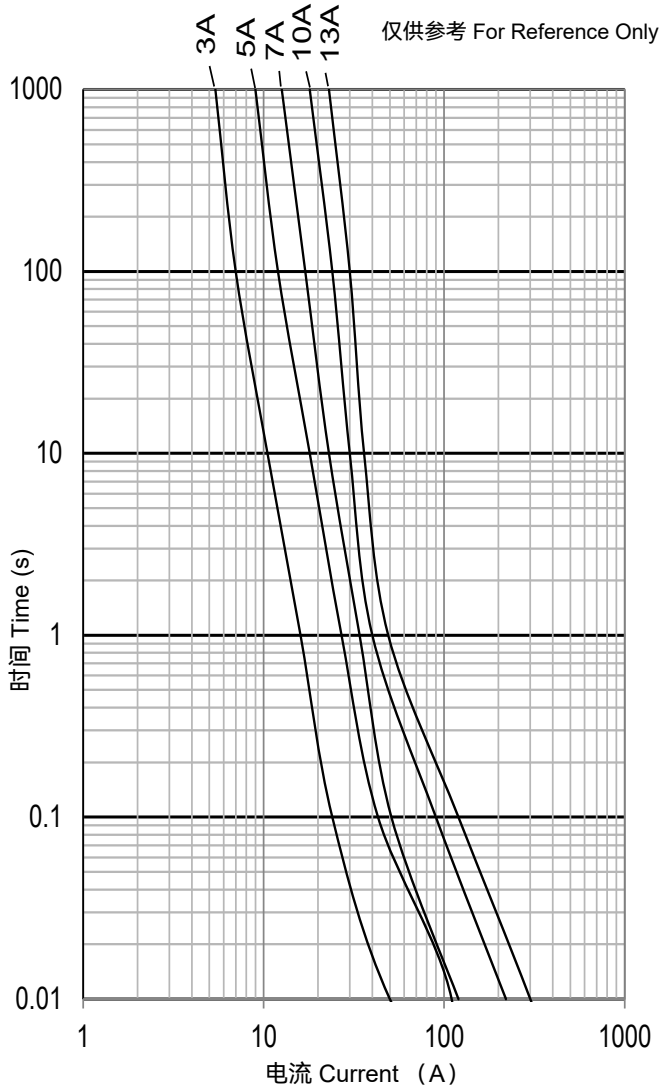

型号说明 Part Number System

SC625FM13A264V

- 额定电压 Rated Voltage
- 额定电流 Rated Current
- 中速熔断 Fast/Medium Acting
- 产品系列 Product Series

结构图 Structure

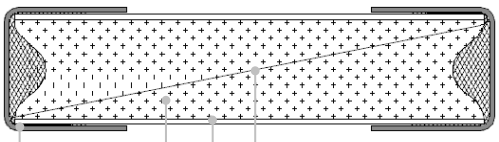

- 熔体 Element
- 管体 Tube
- 填充物 Filler
- 端盖 Cap

厦门赛尔特电子有限公司版权所有
All Rights Reserved by Xiamen SET Electronics Co., Ltd. 2021-2023 V2.2

技术参数 Specifications

系列 Series	额定电流 Rated Current	额定电压 Rated Voltage	分断能力 Rated Breaking Capacity	额定功耗 Rated Power Dissipation [a]	平均熔化热能值 Average Typical Melting I^2t [a]	颜色 Color	安规认证 Agency Approvals		环境 Environmental	
							CCC	ASTA	RoHS	REACH
	(A)	(VAC)		(W)	(A²sec)					
SC625	3	264	6 kA@264 VAC [b]	1	33.2	Red	○	○	●	●
SC625	5	264			164	Black	○	○	●	●
SC625	7	264			232	Black	○	○	●	●
SC625	10	264			365	Black	○	○	●	●
SC625	13	264			1052	Brown	○	○	●	●

a：I^2t的值必须在熔断时间8 ms ~ 10 ms之间计算得到的。
The fusing time used to calculating I^2t shall be within the standard range of 8 ms ~ 10 ms.
b：50Hz, P.f. 0.3-0.4 .
○：待定 Pending.

熔断特性 Pre-arcing Time/Current Characteristic

额定电流 Rated Current	$1.6I_N$	$1.9I_N$
	最小 Min.	最大 Max.
3 A ~ 13 A	30 minutes	30 minutes

包装信息 Packaging Information

尺寸 Dimensions (mm)

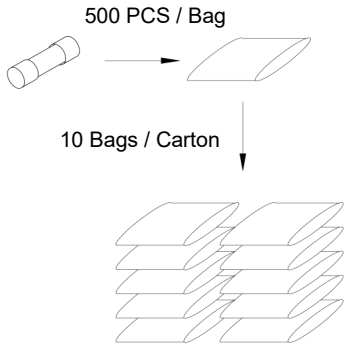

圆筒型 Cartridge Type		
项目 Item	PE袋 Bag	箱 Carton
数量 Q'ty (PCS)	500	5,000
毛重 Gross Weight (kg)	14.0×(1±10%)	

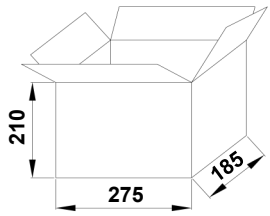

厦门赛尔特电子有限公司版权所有
All Rights Reserved by Xiamen SET Electronics Co., Ltd. 2021-2023 V2.2

Miniature Fuses

尺寸 Dimensions (mm)

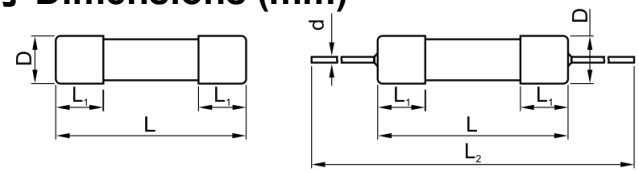

L	L_1	L_2	D	d
20.0±0.5	5.0±0.3	96±2	Φ5.0 $^{+0.25}_{-0}$	≤6.3 A：Φ0.65±0.05 >6.3 A ~ 10 A：Φ0.80±0.05 >10 A ~ 20 A: Φ1.00±0.05

关键特性 Key Features

- 外形尺寸 Physical Size：Φ5 mm × 20 mm
- 快断 Fast Acting
- 低分断能力 Low Breaking Capacity
- 玻璃管，镀镍黄铜帽结构
  Glass Tube, Nickel-plated Brass Endcap Construction
- 执行标准：IEC 60127-2/规格单2，GB/T 9364-2/规格单2
  Designed to IEC 60127-2/Sheet 2, GB/T 9364-2/Sheet 2
- 无铅 Lead-free (Pb-free)
- 环保型产品 RoHS & REACH Compliant

安规认证 Agency Approvals

安规认证 Agency Approvals	认证号 Agency File Number	电流范围 Ampere Range
c UL us	E345932	1 A ~ 10 A
DVE	40033351	1 A ~ 10 A
CCC	2020980207000069[a] 2020980207000071[a]	1 A ~ 6.3 A
KC	SU05023-11007 SU05023-11008 SU05023-11009	1 A ~ 2 A 3.15 A ~ 6.3 A 8 A ~ 10 A

备注：“a”为强制性认证产品符合性自我声明编号。
Remark: “a” is self-declaration number for conformity of Compulsory certification products.

应用 Applications

- 电源 Power Supply
- 家电 Household Appliance
- 通用照明 General Lighting
- 智能家居 Smart Home
- 办公设备 Office Equipment
- 电动工具 Electric Tool
- 医疗设备 Medical Equipment
- 仪器仪表 Instruments and Apparatuses

型号说明 Part Number System

SGF520-1.25A-L

- L: 带尾型 Axial Lead Type
  空白Blank: 圆筒型 Cartridge Type
- 额定电流 Rated Current
- 产品系列 Product Series

时间电流特性曲线 Time Current Curve

仅供参考 For Reference Only

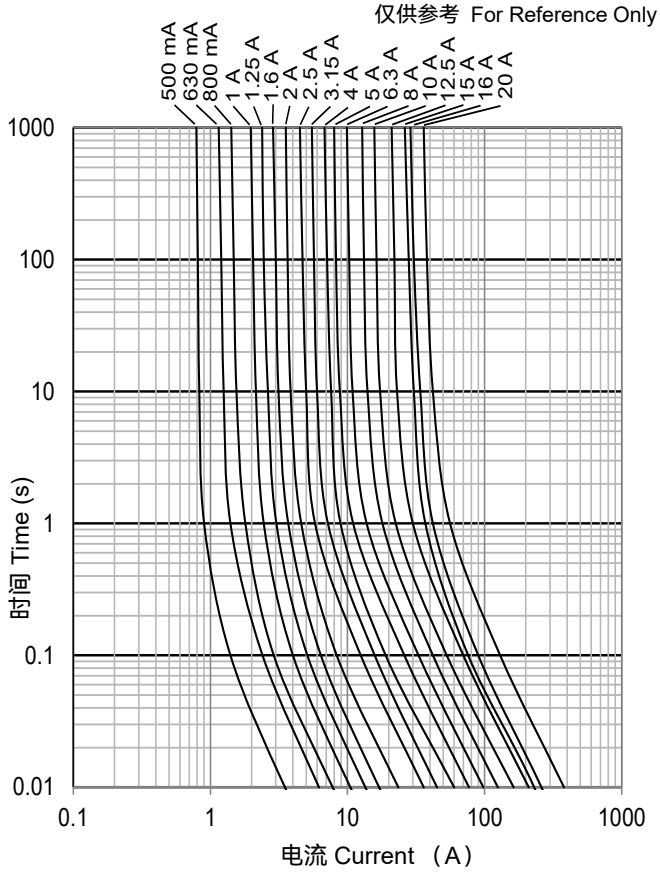

结构图 Structure

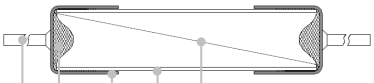

- 熔体 Element
- 管体 Tube
- 端盖 Cap
- 焊锡 Solder Tin
- 引线 Axial Lead

厦门赛尔特电子有限公司版权所有
All Rights Reserved by Xiamen SET Electronics Co., Ltd. 2021-2023 V2.2

Miniature Fuses

技术参数 Specifications

系列 Series	额定电流 Rated Current	额定电压 Rated Voltage	分断能力 Rated Breaking Capacity	最大压降 Max. Voltage Drop [a]	平均熔化热能值 Average Typical Melting I^2t [b]	安规认证 Agency Approvals				环境 Environmental	
						CCC	VDE	KC	cURus	RoHS	REACH
	(A)	(VAC)		(mV)	(A^2sec)						
SGF520	0.5	250	35 A@250 VAC	1000	0.33	○	○	○	○	●	●
SGF520	0.63	250		650	0.51	○	○	○	○	●	●
SGF520	0.8	250		240	0.83	○	○	○	○	●	●
SGF520	1	250		200	1.2	●	●	●	●	●	●
SGF520	1.25	250		200	2.6	●	●	●	●	●	●
SGF520	1.6	250		190	4.2	●	●	●	●	●	●
SGF520	2	250		170	6.2	●	●	●	●	●	●
SGF520	2.5	250		170	11.3	○	○	○	○	●	●
SGF520	3.15	250		150	20.8	●	●	●	●	●	●
SGF520	4	250	40 A@250 VAC	130	32	○	○	○	○	●	●
SGF520	5	250	50 A@250 VAC	130	62.5	●	●	●	●	●	●
SGF520	6.3	250	63 A@250 VAC	130	95.2	●	●	●	●	●	●
SGF520	8	250	80 A@250 VAC	130	166		●	●	●	●	●
SGF520	10	250	100 A@250 VAC	130	280		●	●	●	●	●
SGF520	12.5	250	125 A@250 VAC	100	468				○	●	●
SGF520	15	250	150 A@250 VAC	100	675				○	●	●
SGF520	16	250	160 A@250 VAC	100	768				○	●	●
SGF520	20	250	200 A@250 VAC	100	1215				○	●	●

a:最大压降（环境温度23 °C时，在额定电流下测得）。
Max. Voltage Drop (voltage drop is measured at 23 °C ambient temp. at rated current).
b:I^2t是在10倍额定电流测试下的数据计算得到的。
I^2t value is measured at 10 I_N.
○：待定 Pending

熔断特性 Pre-arcing Time/Current Characteristic

额定电流 Rated Current	2.1I_N	2.75I_N		4I_N		10I_N
	最大 Max.	最小 Min.	最大 Max.	最小 Min.	最大 Max.	最大 Max.
0.5 A ~ 6.3 A	30 minutes	50 ms	2 s	10 ms	300 ms	20 ms
8 A ~ 10 A	30 minutes	50 ms	2 s	10 ms	400 ms	40 ms
12.5 A ~ 20 A	30 minutes	100 ms	6 s	20 ms	600 ms	60 ms

厦门赛尔特电子有限公司版权所有
All Rights Reserved by Xiamen SET Electronics Co., Ltd. 2021-2023 V2.2

Miniature Fuses

包装信息 Packaging Information

尺寸 Dimensions (mm)

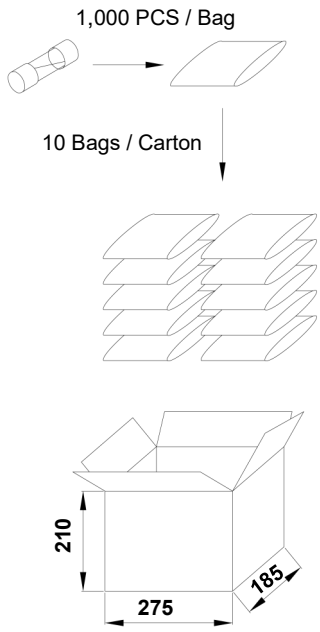

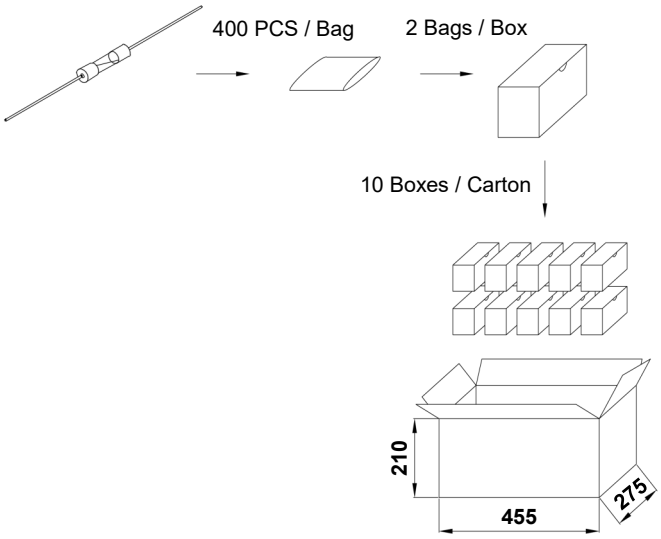

圆筒型 Cartridge Type		
项目 Item	PE袋 Bag	箱 Carton
数量 Q'ty (PCS)	1,000	10,000
毛重 Gross Weight (kg)		8.0×(1±10%)

带尾型 Axial Lead Type			
项目 Item	PE袋 Bag	盒 Box	箱 Carton
数量 Q'ty (PCS)	400	800	8,000
毛重 Gross Weight (kg)		9.0×(1±10%)	

Miniature Fuses

厦门赛尔特电子有限公司版权所有
All Rights Reserved by Xiamen SET Electronics Co., Ltd. 2021-2023 V2.2

尺寸 Dimensions (mm)

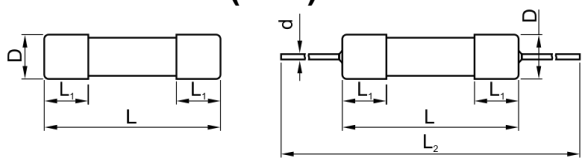

L	L_1	L_2	D	d
20.0±0.5	5.0±0.3	96±2	Φ5.0 $^{+0.25}_{-0}$	≤6.3 A：Φ0.65±0.05 >6.3 A ~ 10 A：Φ0.80±0.05 >10 A ~ 20 A: Φ1.00±0.05

关键特性 Key Features

- 外形尺寸 Physical Size：Φ5 mm × 20 mm
- 慢断 Time-Lag
- 低分断能力 Low Breaking Capacity
- 玻璃管，镀镍黄铜帽结构
  Glass Tube, Nickel-plated Brass Endcap Construction
- 执行标准：IEC 60127-2/规格单3，GB/T 9364-2/规格单3
  Designed to IEC 60127-2/Sheet 3, GB/T 9364-2/Sheet 3
- 无铅 Lead-free (Pb-free)
- 环保型产品 RoHS & REACH Compliant

安规认证 Agency Approvals

安规认证 Agency Approvals	认证号 Agency File Number	电流范围 Ampere Range
c UL us	E345932	1 A ~ 10 A
DVE	40033355	1 A ~ 10 A
CCC	2020980207000068[a] 2020980207000072[a]	1 A ~ 6.3 A
KC	SU05023-11006 SU05023-11004 SU05023-11005	1 A ~ 2 A 3.15 A ~ 6.3 A 8 A ~ 10 A

备注：“a”为强制性认证产品符合性自我声明编号。
Remark: “a” is self-declaration number for conformity of Compulsory certification products.

应用 Applications

- 电源 Power Supply
- 家电 Household Appliance
- 防雷器 SPD
- 通用照明 General Lighting
- 智能家居 Smart Home
- 办公设备 Office Equipment
- 电动工具 Electric Tool
- 医疗设备 Medical Equipment

型号说明 Product Number System

SGT520-1.25A-L

- L: 带尾型 Axial Lead Type
- 空白Blank: 圆筒型 Cartridge Type
- 额定电流 Rated Current
- 产品系列 Product Series

时间电流特性曲线 Time Current Curve

仅供参考 For Reference Only

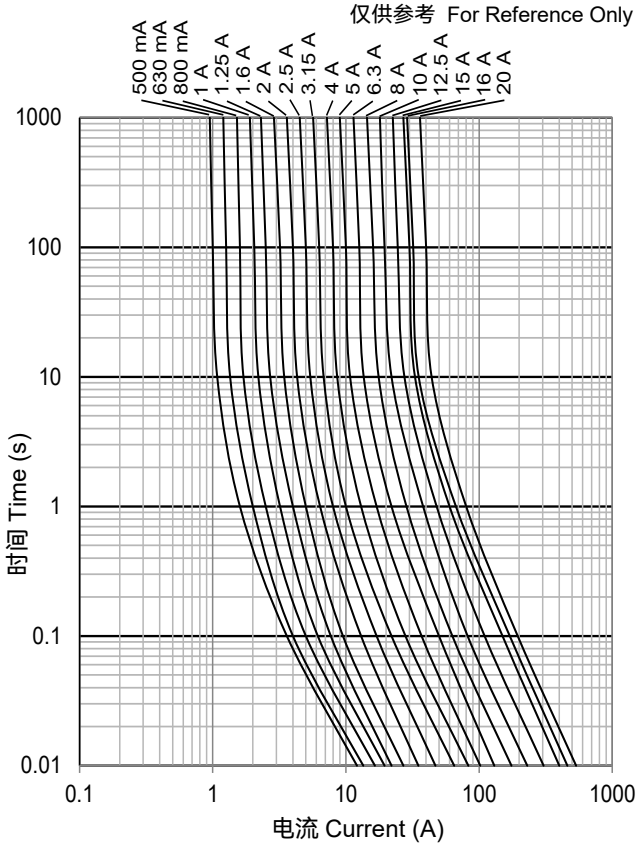

结构图 Structure

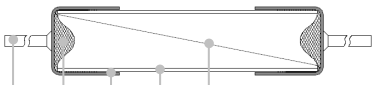

- 熔体 Element
- 管体 Tube
- 端盖 Cap
- 焊锡 Solder Tin
- 引线 Axial Lead

厦门赛尔特电子有限公司版权所有
All Rights Reserved by Xiamen SET Electronics Co., Ltd. 2021-2023 V2.2

Miniature Fuses

技术参数 Specifications

系列 Series	额定电流 Rated Current (A)	额定电压 Rated Voltage (VAC)	分断能力 Rated Breaking Capacity	最大压降 Max. Voltage Drop [a] (mV)	平均熔化热能值 Average Typical Melting I^2t [b] (A²sec)	安规认证 Agency Approvals CCC	VDE	KC	cURus	环境 Environmental RoHS	REACH
SGT520	0.5	250	35 A@250 VAC	900	1.02	○	○	○	○	●	●
SGT520	0.63	250		300	1.78	○	○	○	○	●	●
SGT520	0.8	250		250	3.52	○	○	○	○	●	●
SGT520	1	250		150	5.7	●	●	●	●	●	●
SGT520	1.25	250		150	11.2	●	●	●	●	●	●
SGT520	1.6	250		150	21	●	●	●	●	●	●
SGT520	2	250		150	30.8	●	●	●	●	●	●
SGT520	2.5	250		120	22	○	○	○	○	●	●
SGT520	3.15	250		100	103	●	●	●	●	●	●
SGT520	4	250	50 A@250 VAC	100	68	○	○	○	○	●	●
SGT520	5	250	50 A@250 VAC	100	117	●	●	●	●	●	●
SGT520	6.3	250	63 A@250 VAC	100	230	●	●	●	●	●	●
SGT520	8	250	80 A@250 VAC	100	355		●	●	●	●	●
SGT520	10	250	100 A@250 VAC	100	570		●	●	●	●	●
SGT520	12	250	120 A@250 VAC	90	750				○	●	●
SGT520	12.5	250	125 A@250 VAC	80	890				○	●	●
SGT520	15	250	150 A@250 VAC	80	1215				○	●	●
SGT520	16	250	160 A@250 VAC	80	1280				○	●	●
SGT520	20	250	200 A@250 VAC	80	3680				○	●	●

a:最大压降（环境温度23 °C时，在额定电流下测得）。
Max. Voltage Drop (voltage drop is measured at 23 °C ambient temp. at rated current).
b:I^2t是在10倍额定电流测试下的数据计算得到的。
I^2t value is measured at 10 I_N.
○:待定 Pending

熔断特性 Pre-arcing Time/Current Characteristic

额定电流 Rated Current	$2.1I_N$ 最大 Max.	$2.75I_N$ 最小 Min.	$2.75I_N$ 最大 Max.	$4I_N$ 最小 Min.	$4I_N$ 最大 Max.	$10I_N$ 最小 Min.	$10I_N$ 最大 Max.
0.5 A ~ 20 A	2 minutes	600 ms	10 s	150 ms	3 s	20 ms	300 ms

厦门赛尔特电子有限公司版权所有
All Rights Reserved by Xiamen SET Electronics Co., Ltd. 2021-2023 V2.2

Miniature Fuses

包装信息 Packaging Information

尺寸 Dimensions (mm)

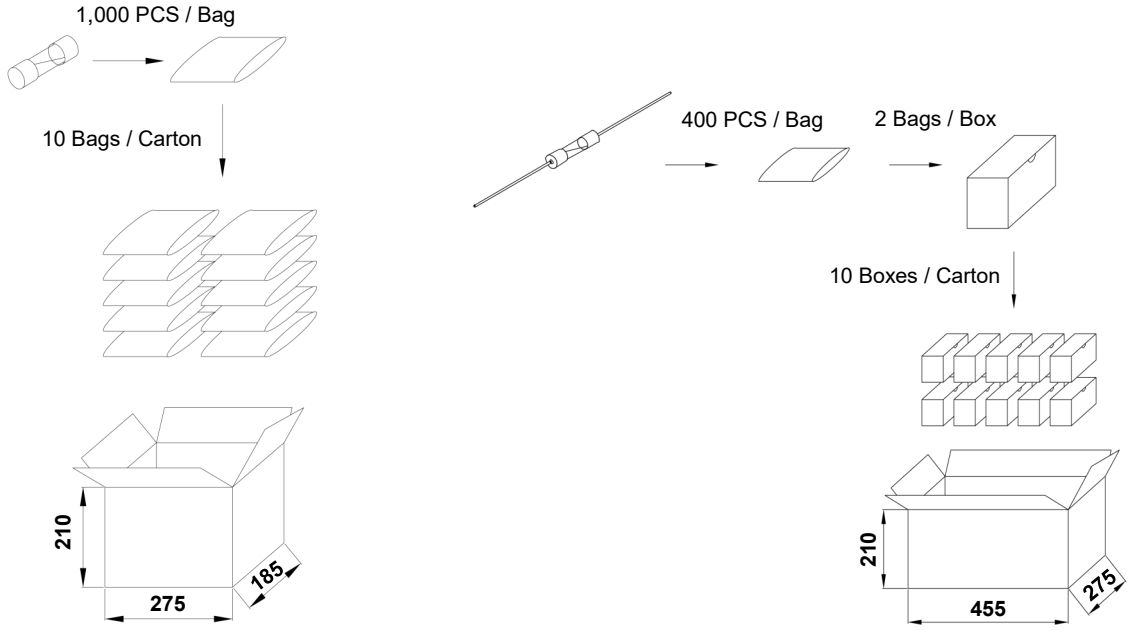

圆筒型 Cartridge Type		
项目 Item	PE袋 Bag	箱 Carton
数量 Q'ty (PCS)	1,000	10,000
毛重 Gross Weight (kg)		8.0×(1±10%)

带尾型 Axial Lead Type			
项目 Item	PE袋 Bag	盒 Box	箱 Carton
数量 Q'ty (PCS)	400	800	8,000
毛重 Gross Weight (kg)		9.0×(1±10%)	

Miniature Fuses

厦门赛尔特电子有限公司版权所有
All Rights Reserved by Xiamen SET Electronics Co., Ltd. 2021-2023 V2.2

尺寸 Dimensions (mm)

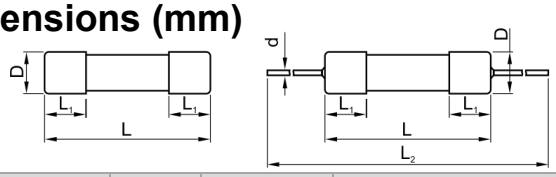

L	L_1	L_2	D	d
20.0 ± 0.5	5.1 ± 0.3	96 ± 2	Φ5.20 $^{+0.1}_{-0.2}$	≤6.3 A: Φ0.65 ± 0.05 >6.3 A ~ 10 A: Φ0.80 ± 0.05 >10 A ~ 20 A: Φ1.00 ± 0.05 25 A: Φ1.20 ± 0.05

关键特性 Key Features

- 外形尺寸 Physical Size: Φ5 mm × 20 mm
- 快断 Fast Acting
- 高分断能力 High Breaking Capacity
- 陶瓷管，镀镍黄铜帽结构
  Ceramic Tube, Nickel-plated Brass Endcap Construction
- 执行标准：UL248-14 / 60127-2＆7
  Designed To UL248-14 / 60127-2＆7
- 无铅 Lead-free (Pb-free)
- 环保型产品 RoHS & REACH Compliant

安规认证 Agency Approvals

安规认证 Agency Approvals	认证号 Agency File Number	电流范围 Ampere Range
c UL us	E345932	0.5 A ~ 25 A
CQC	CQC21012313736 CQC21012313738 CQC21012317022 CQC21012317866 CQC21012319112 CQC21012320077 CQC21012322189 CQC21012322191	0.4 A ~ 20 A
TÜVRheinland	R50541719	1 A ~ 20 A

应用 Applications

- 电源 Power Supply
- 家电 Household Appliance
- 通用照明 General Lighting
- 智能家居 Smart Home
- 办公设备 Office Equipment
- 电动工具 Electric Tool
- 医疗设备 Medical Equipment
- 仪器仪表 Instruments and Apparatuses

型号说明 Product Number System

SCF520F1.25A250V

- 额定电压 Rated Voltage
- 额定电流 Rated Current
- 快断 Fast Acting
- 产品系列 Product Series
  - SCF520: 圆筒型 Cartridge Type
  - SCF520P: 带尾型 Axial Lead Type

时间电流特性曲线 Time Current Curve

仅供参考 For Reference Only

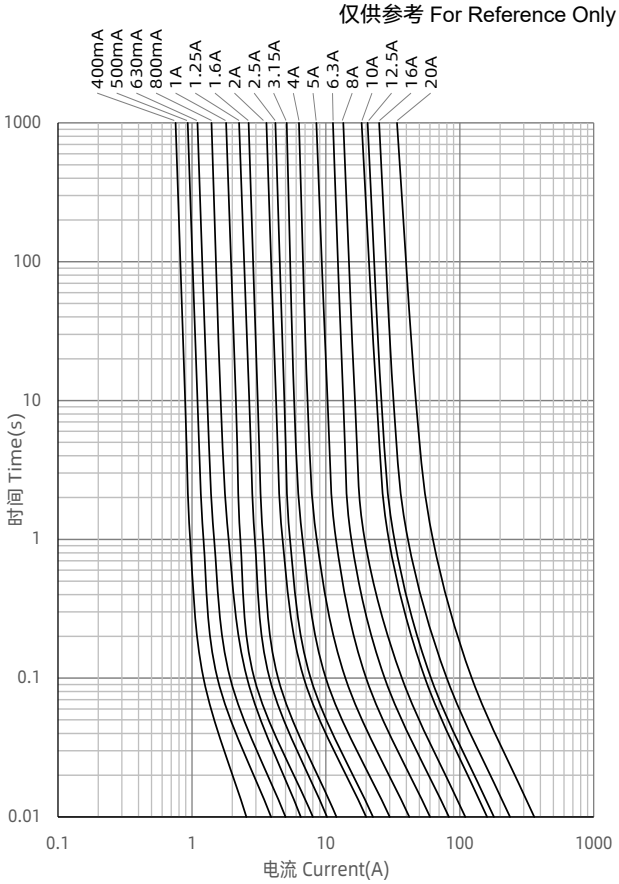

结构图 Structure

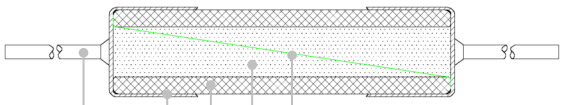

- 熔体 Element
- 填充物 Filler
- 管体 Tube
- 端盖 Cap
- 引线 Axial Lead

厦门赛尔特电子有限公司版权所有
All Rights Reserved by Xiamen SET Electronics Co., Ltd. 2021-2023 V2.2

Miniature Fuses

技术参数 Specifications

系列 Series	额定电流 Rated Current (A)	额定分断能力 Rated Breaking Capacity	平均熔化热能值 Average Typical Melting I^2t [a] (A²sec)	安规认证 Agency Approvals CQC	TUV	cURus	环境 Environmental RoHS	REACH
SCF520 SCF520P	0.4	UL (0.4 A - 10 A): 1500 A@300 VAC 300 A@500 VAC / DC UL (12 A - 20 A): 1500 A@300 VAC 300 A@500 VAC 300 A@420 VDC UL (25 A): 1500 A@300VAC 300 A@420VAC / DC UL (SCF520P25A): 300 @500VAC	0.06	●			●	●
SCF520 SCF520P	0.5		0.14	●		●	●	●
SCF520 SCF520P	0.63		0.23	●		●	●	●
SCF520 SCF520P	0.8		0.4	●		●	●	●
SCF520 SCF520P	1		0.6	●	●	●	●	●
SCF520 SCF520P	1.25		1.0	●	●	●	●	●
SCF520 SCF520P	1.6		1.35	●	●	●	●	●
SCF520 SCF520P	2		3.8	●	●	●	●	●
SCF520 SCF520P	2.5		4.8	●	●	●	●	●
SCF520 SCF520P	3		8.0			●	●	●
SCF520 SCF520P	3.15		8.5	●	●	●	●	●
SCF520 SCF520P	4		16.5	●	●	●	●	●
SCF520 SCF520P	5		34	●	●	●	●	●
SCF520 SCF520P	6.3		65	●	●	●	●	●
SCF520 SCF520P	8		114	●	●	●	●	●
SCF520 SCF520P	10		235	●	●	●	●	●
SCF520 SCF520P	12.5		307	●	●	●	●	●
SCF520 SCF520P	15		315			●	●	●
SCF520 SCF520P	16		535	●	●	●	●	●
SCF520 SCF520P	20		1250	●	●	●	●	●
SCF520 SCF520P	25		2000			●	●	●

a: I^2t 是在10倍额定电流测试下得到的。I^2t value is measured at 10 I_N. ○:待定 Pending

额定分断能力 Breaking Capacity (CQC/TUV)
SCF520 (0.4 A / 0.5 A / 0.63 A / 1 A / 1.6 A / 2 A / 2.5 A / 3.15 A / 5 A): 5000 A@250 VAC / DC, 300 A@600 VAC / DC, 3000 A@300 VAC
SCF520 (0.8 A / 1.25 A / 4 A / 6.3 A / 12.5 A / 16 A): 5000 A@250 VAC / DC, 300 A@600 VDC, 3000 A@300 VAC, 200 A@500 VAC
SCF520 (10 A): 5000 A@250 VAC / DC, 300 A@500 VAC / DC, 3000 A@300 VAC
SCF520 (20 A): 5000 A@250 VDC, 200 A@350VAC
SCF520P (0.4 A / 0.8 A / 1 A / 4 A / 5 A / 6.3 A / 8 A / 10 A): 5000 A@250 VAC / DC, 300 A@600 VDC, 3000 A@300 VAC, 300 A@500 VAC
SCF520P (0.5 A / 0.63 A / 1.25 A / 1.6 A / 2 A / 2.5 A / 3.15 A): 5000 A@250 VAC / DC, 300 A@600 VAC / DC, 3000 A@300 VAC
SCF520P (12.5 A / 16 A): 5000 A@250 VAC / DC, 300 A@600 VDC, 3000 A@300 VAC, 200 A@420 VAC
SCF520P (20 A): 5000 A@250 VDC, 200 A@420 VDC, 200 A@350 VAC

厦门赛尔特电子有限公司版权所有
All Rights Reserved by Xiamen SET Electronics Co., Ltd. 2021-2023 V2.2

Miniature Fuses

熔断特性 Pre-arcing Time/Current Characteristic

额定电流 Rated Current	$2.1I_N$	$2.75I_N$		$4I_N$		$10I_N$
	最大 Max.	最小 Min.	最大 Max.	最小 Min.	最大 Max.	最大 Max.
0.4 A ~ 10 A	30 minutes	40 ms	20 s	10 ms	1 s	30 ms
12 A ~ 25 A	30 minutes	40 ms	20 s	10 ms	1 s	80 ms

包装信息 Packaging Information

尺寸 Dimensions (mm)

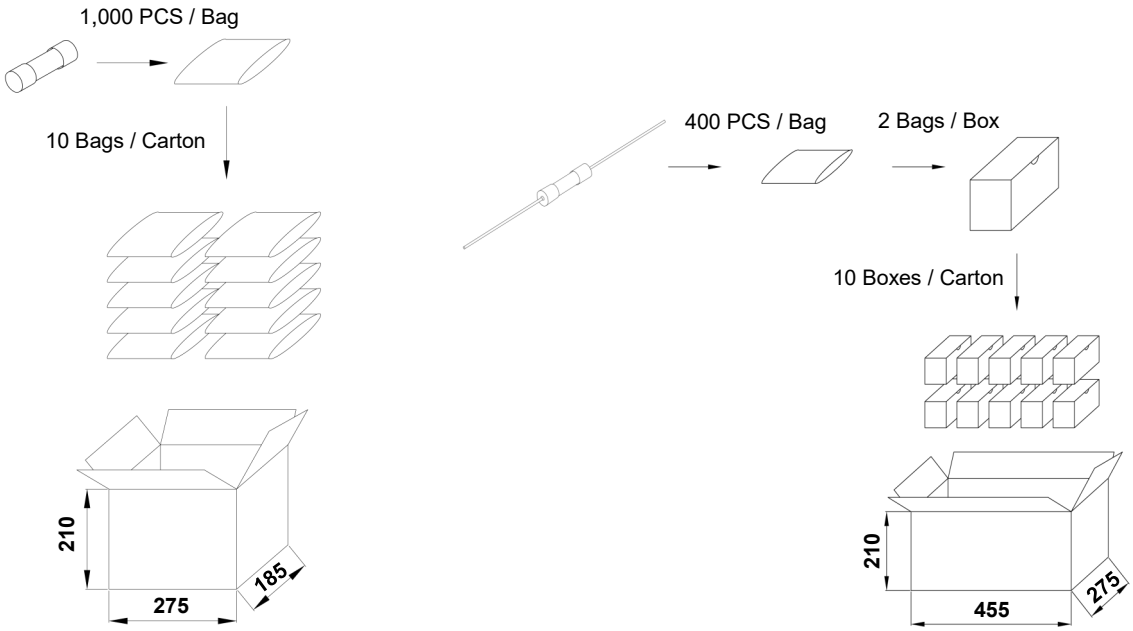

圆筒型 Cartridge Type		
项目 Item	PE袋 Bag	箱 Carton
数量 Q'ty (PCS)	1,000	10,000
毛重 Gross Weight (kg)		13.5×(1±10%)

带尾型 Axial Lead Type			
项目 Item	PE袋 Bag	盒 Box	箱 Carton
数量 Q'ty (PCS)	400	800	8,000
毛重 Gross Weight (kg)		15×(1±10%)	

Miniature Fuses

厦门赛尔特电子有限公司版权所有
All Rights Reserved by Xiamen SET Electronics Co., Ltd. 2021-2023 V2.2

尺寸 Dimensions (mm)

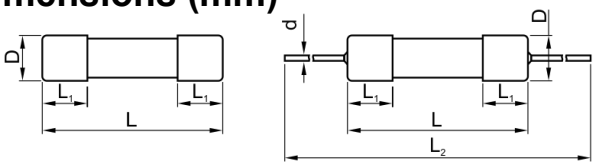

L	L_1	L_2	D	d
20.0 ± 0.5	5.1 ± 0.3	96 ± 2	Φ5.00 $^{+0.25}_{-0}$	≤ 6.3 A: Φ0.65 ± 0.05 > 6.3 A to 10 A: Φ0.80 ± 0.05 > 10 A to 20 A: Φ1.00 ± 0.05 25 A / 30 A: Φ1.20 ± 0.05

关键特性 Key Features

- 外形尺寸 Physical Size: Φ5 mm × 20 mm
- 慢断 Time-Lag
- 高分断能力 High Breaking Capacity
- 陶瓷管，镀镍黄铜帽结构
  Ceramic Tube, Nickel-plated Brass Endcap Construction
- 执行标准：UL248-14 / IEC60127-2＆7
  Designed To UL248-14 / IEC60127-2＆7
- 无铅 Lead-free (Pb-free)
- 环保型产品 RoHS & REACH Compliant

安规认证 Agency Approvals

安规认证 Agency Approvals	认证号 Agency File Number	电流范围 Ampere Range
c UL us	E345932	0.4 A ~ 30 A
CQC	CQC21012316337 CQC21012316630 CQC21012324758 CQC21012325082	0.4 A ~ 20 A
TÜVRheinland	R50576001 R50576001 R50538205 R50538319	0.8 A ~ 2.5 A 3.15 A ~ 4 A 5 A ~ 8 A 10 A ~ 20 A

应用 Applications

- 电源 Power Supply
- 家电 Household Appliance
- 防雷器 SPD
- 通用照明 General Lighting
- 智能家居 Smart Home
- 办公设备 Office Equipment
- 电动工具 Electric Tool
- 医疗设备 Medical Equipment

时间电流特性曲线 Time Current Curve

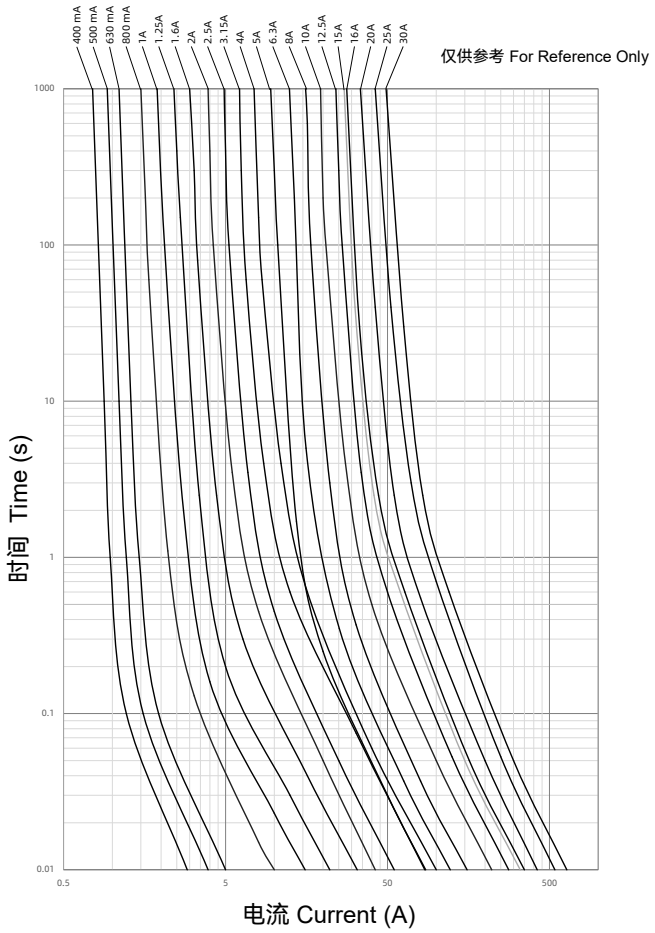

型号说明 Product Number System

SCT520T1.25A250V

- 额定电压 Rated Voltage
- 额定电流 Rated Current
- 慢断 Time-Lag
- 产品系列 Product Series
  - SCT520: 圆筒型 Cartridge Type
  - SCT520P: 带尾型 Axial Lead Type

结构图 Structure

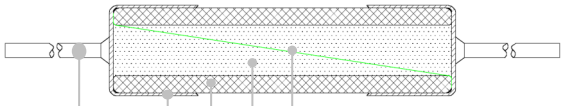

- 熔体 Element
- 填充物 Filler
- 管体 Tube
- 端盖 Cap
- 引线 Axial Lead

厦门赛尔特电子有限公司版权所有
All Rights Reserved by Xiamen SET Electronics Co., Ltd. 2021-2023 V2.2

Miniature Fuses

技术参数 Specifications

系列 Series	额定电流 Rated Current (A)	额定分断能力 Rated Breaking Capacity	平均熔化热能值 Average Typical Melting I^2t [a] (A^2sec)	安规认证 Agency Approvals CQC	TUV	cURus	环境 Environmental RoHS	REACH
SCT520 SCT520P	0.4	UL (0.4 A - 10 A): 10 kA@250 VAC 300 A@400 VAC 200 A@500 VAC SCT520P: 2 kA@300 VAC SCT520: 1500 A@300 VAC 3 kA@300 VDC 500 A@500 VDC UL (12.5 A - 20 A): 1 kA@250 VAC SCT520P: 300 A@500 VAC SCT520: 500 A@400 VAC 500 A@300 VDC UL (25 A - 30 A): SCT520P: 500 A@250 VAC SCT520: 500 A@300 VAC CQC/TUV (0.4 A - 10 A): 5 kA@250 VDC 3 kA@300 VDC 500 A@500 VDC 1500 A@250 VAC 300 A@400 VAC 200 A@500 VAC CQC/TUV (12.5 A - 20 A): 500 A@300 VDC 1 kA@250 VAC 300 A@400 VAC	0.06	●		●	●	●
SCT520 SCT520P	0.5		0.14	●		●	●	●
SCT520 SCT520P	0.63		0.23	●		●	●	●
SCT520 SCT520P	0.8		0.96	●	●	●	●	●
SCT520 SCT520P	1		2.2	●	●	●	●	●
SCT520 SCT520P	1.25		4.7	●	●	●	●	●
SCT520 SCT520P	1.6		10.2	●	●	●	●	●
SCT520 SCT520P	2		20	●	●	●	●	●
SCT520 SCT520P	2.5		31	●	●	●	●	●
SCT520 SCT520P	3		48			●	●	●
SCT520 SCT520P	3.15		74	●	●	●	●	●
SCT520 SCT520P	4		96	●	●	●	●	●
SCT520 SCT520P	5		75	●	●	●	●	●
SCT520 SCT520P	6.3		147	●	●	●	●	●
SCT520 SCT520P	8		237	●	●	●	●	●
SCT520 SCT520P	10		500	●	●	●	●	●
SCT520 SCT520P	12.5		820	●	●	●	●	●
SCT520 SCT520P	15		1100			●	●	●
SCT520 SCT520P	16		1300	●	●	●	●	●
SCT520 SCT520P	20		1800	●	●	●	●	●
SCT520 SCT520P	25		3100			●	●	●
SCT520 SCT520P	30		4500			●	●	●

a: I^2t是在10倍额定电流测试下得到的。I^2t value is measured at 10 I_N.

○: 待定 Pending

厦门赛尔特电子有限公司版权所有
All Rights Reserved by Xiamen SET Electronics Co., Ltd. 2021-2023 V2.2

Miniature Fuses

熔断特性 Pre-arcing Time/Current Characteristic

额定电流 Rated Current	$2.1I_N$	$2.75I_N$		$4I_N$		$10I_N$	
	最大 Max.	最小 Min.	最大 Max.	最小 Min.	最大 Max.	最小 Min.	最大 Max.
0.4 A ~ 0.8 A	30 minutes	250 ms	80 s	50 ms	5 s	5 ms	150 ms
1 A ~ 3.15 A	30 minutes	750 ms	80 s	95 ms	5 s	10 ms	150 ms
4 A ~ 10 A	30 minutes	750 ms	80 s	150 ms	5 s	10 ms	150 ms
12 A ~ 30 A	30 minutes	750 ms	80 s	150 ms	8 s	10 ms	150 ms

包装信息 Packaging Information

尺寸 Dimensions (mm)

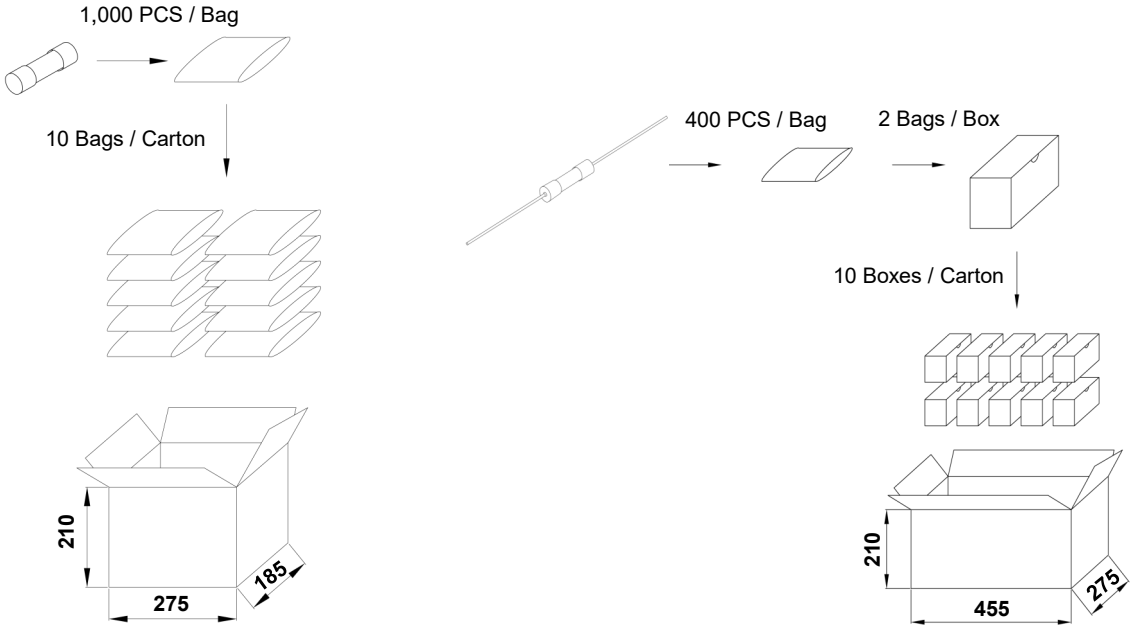

圆筒型 Cartridge Type		
项目 Item	PE袋 Bag	箱 Carton
数量 Q'ty (PCS)	1,000	10,000
毛重 Gross Weight (kg)		13.5×(1±10%)

带尾型 Axial Lead Type			
项目 Item	PE袋 Bag	盒 Box	箱 Carton
数量 Q'ty (PCS)	400	800	8,000
毛重 Gross Weight (kg)		15×(1±10%)	

Miniature Fuses

厦门赛尔特电子有限公司版权所有
All Rights Reserved by Xiamen SET Electronics Co., Ltd. 2021-2023 V2.2

超小型熔断体
Sub-miniature Fuse-links (SFL)

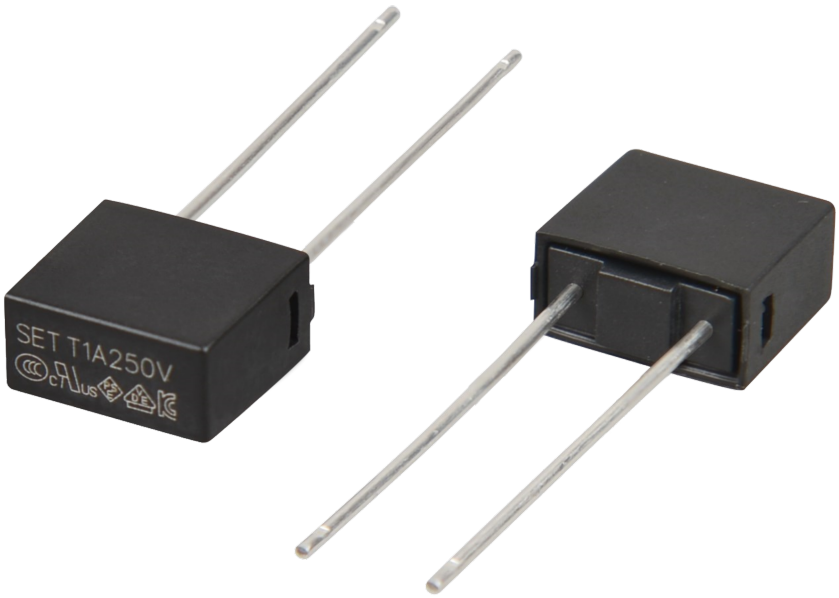

特征 Features

- 塑料壳 Plastic Case
- 快断与慢断 Fast Acting and Time-Lag
- 额定电流：(0.1 ~ 10) A Rated Current: (0.1 to 10) A
- 额定电压：(125 ~ 400) VAC Rated Voltage: (125 to 400) VAC
- 低分断 Low Breaking Capacity
- 无铅且符合RoHs＆REACH要求 Lead-free (Pb-free), RoHS & REACH Compliant

Miniature Fuses

厦门赛尔特电子有限公司版权所有
All Rights Reserved by Xiamen SET Electronics Co., Ltd. 2021-2023 V2.2

超小型熔断体
Sub-miniature Fuse-links (SFL)

超小型熔断体特性与型号概览
Sub-miniature Fuse-links (SFL) Feature & Model List Overview

额定电流 Rated Current (A) \ 页码 Page	12	15
40.00	○	○
30.00	○	○
25.00	○	○
20.00	○	○
16.00	○	○
15.00	○	○
13.00	○	○
12.50	○	○
12.00	○	○
10.00	SPF478-10A	SPT478-10A
8.00	SPF478-8A	SPT478-8A
7.00	○	○
6.30	SPF478-6.3A	SPT478-6.3A
5.00	SPF478-5A	SPT478-5A
4.00	SPF478-4A	SPT478-4A
3.15	SPF478-3.15A	SPT478-3.15A
3.00	○	○
2.50	SPF478-2.5A	SPT478-2.5A
2.00	SPF478-2A	SPT478-2A
1.60	SPF478-1.6A	SPT478-1.6A
1.25	SPF478-1.25A	SPT478-1.25A
1.00	SPF478-1A	SPT478-1A
0.80	○	SPT478-800mA
0.63	○	SPT478-630mA
0.50	○	SPT478-500mA
0.40	○	SPT478-400mA
0.315	○	SPT478-315mA
0.25	○	SPT478-250mA
0.20	○	SPT478-200mA
0.16	○	SPT478-160mA
0.125	○	SPT478-125mA
0.10	○	SPT478-100mA
U_r(VAC)(VDC) 额定电压 Rated Voltage	125 VAC ~ 400 VAC	
时间特性 Time Feature	快断 Fast Acting	慢断 Time Lag
管身材质 Tube Material	塑料 Plastic Case	
标准 Standards	IEC / UL	
分断能力 Breaking Capacity	35 A ~ 150 A	
外形尺寸(mm) Physical Size	4 × 7 × 8	
产品结构 Product Structure	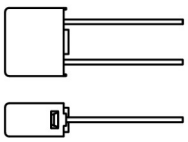	

型号 Model

Miniature Fuses

厦门赛尔特电子有限公司版权所有
All Rights Reserved by Xiamen SET Electronics Co., Ltd. 2021-2023 V2.2

超小型熔断体
Sub-miniature Fuse-links (SFL)

产品描述 Description

小型熔断器(Miniature Fuses)是一种小型的过电流保护装置。它串联在电路中，一般要求电阻小（功耗小），当电路正常工作时，它相当于一根导线，能够长时间稳定地导通电路；当电路不稳定或外部干扰而发生电流波动时，它也应能承受一定范围的过载；只有当电路中出现明显的过载或短路时，小型熔断器(Miniature Fuses)才会动作，通过切断电流来保护电路。
赛尔特公司的小型熔断器(Miniature Fuses)广泛应用于各种电子电器设备的过电流保护，其具有多种安装方式、结构紧凑、性能可靠稳定等特点。赛尔特可提供的小型熔断器(Miniature Fuses)的技术参数：额定电流（0.1~40）A，额定电压（125~600）VAC、（24~600）VDC，安规认证包括cURus、VDE、PSE、CCC、CQC、KC、TUV，同时满足RoHS、REACH要求。

Miniature Fuses is an Over Current Protection device. It is connected in series in the circuit and generally requires low resistance (low power consumption). When the circuit works normally, it is equivalent to a wire, which can conduct the circuit continuously and stably. When the current fluctuates due to circuit instability or external interference, it should also be able to withstand a certain range of overload. Only when overload or short circuit happens, Miniature Fuses can blow fast to protect the circuit.
SETsafe | SETfuse Miniature Fuses is widely used in all kinds of electrical equipment. It has a variety of mounting modes, compact structure, reliable and stable performance. Technical parameters of SETsafe | SETfuse Miniature Fuses: Its rated current ranges from 0.1 A to 40 A, rated voltage ranges from 125 VAC to 600 VAC, and from 24 VDC to 600 VDC, complies with RoHS and REACH, and is approved by cURus, VDE, PSE, CCC, CQC, KC, TUV.

Miniature Fuses

厦门赛尔特电子有限公司版权所有
All Rights Reserved by Xiamen SET Electronics Co., Ltd. 2021-2023 V2.2

术语 Glossary

项目 Item	描述 Description
熔断器 **Fuse**	一种装置，当通过该装置的电流超过规定值，并持续足够的时间，该装置中一个或多个经特殊设计、特殊配比的部件熔断，断开其所接入的电路，从而切断电流。 A device, by the fusing of one or more of its specially designed and proportioned components, opens the circuit in which it is inserted by breaking the current when this exceeds a given value for a sufficient time. —(IEC 60127)
快断型熔断器 **Fast Acting Fuse**	在过载和短路时能很快断开电路的一类熔断器。这类熔断器无法承受一些超载浪涌电流。UL认证或认可的速断型熔断器，通常在额定电流的200%到250%时，会在5秒内断开。IEC标准有两类快断型熔断器： A fuse which opens on overload and short circuits very quickly. This type of fuse is not designed to withstand temporary overload currents associated with some electrical load. UL listed or recognized fast acting fuses would typically open within 5 s when subjected to 200% to 250% of its rated current. IEC has two categories of fast acting fuses: ● F表示快速动作，10倍额定电流时，能在0.001 s到0.01 s之间断开。 F = Fast acting, opens on 10 times rated current within 0.001 s to 0.01 s. ● FF表示非常快速动作,10倍额定电流时，能在0.001 s以内断开。 FF = Very fast acting, opens on 10 times rated current within less than 0.001 s. —(UL 248)
延时型熔断器 **Time-Lag Fuse**	内置时间延迟，允许暂时的、无害的浪涌电流通过而不动作的一类熔断器。在设计时持续过载和短路电流情况下的断开时间应该是：UL认证或认可的延时型熔断器在额定电流的200%到250%下，会在2分钟内断开。IEC标准有两种延时型熔断器： A fuse with a built-in delay that allows temporary and harmless inrush currents to pass without operating. In design, the breaking time under the condition of continuous overload and short-circuit current shall be: UL listed or recognized time delay fuses typically open in 2 minutes Max. when subjected to 200% to 250% of rated current. IEC has two categories of time delay fuses: ● T表示延时，10倍额定电流时，能在0.01 s到0.3 s之间断开。 T = Time-Lag, opens on 10 times rated current within 0.01 s to 0.3 s. ● TT表示长延时，10倍额定电流时，能在0.1 s到1 s之间断开。 TT = Long Time-Lag, opens on 10 times rated current within 0. 1 s to 1 s. —(UL 248)
额定电流 **Rated Current**	熔断器的额定电流是根据其可控制测试条件的截流能力确定的。每个熔断器上都应标上额定电流，它可以是数字、字母、或色码。 The rated current of a fuse identifies its current-carrying capacity based on a controllable set of test conditions. Each fuse is marked with its rated current, this rating can be identified with a numeric, alpha, or color code mark. —(IEC 60127)
额定电压 **Rated Voltage**	熔断器可以使用的最大安全开断电压，超过额定电压将影响断开过载和短路电路的能力。 A Max. open circuit voltage in which a fuse can be used, yet safely interrupt an overcurrent. Exceeding the voltage rating of a fuse impairs its ability to clear an overload or short circuit safely. —(IEC 60127)

Miniature Fuses

厦门赛尔特电子有限公司版权所有
All Rights Reserved by Xiamen SET Electronics Co., Ltd. 2021-2023 V2.2

术语 Glossary

项目 Item	描述 Description
正常工作电流 **Normal Operating Current**	正常条件下接通电路后，电路中流过的电流被称为正常工作电流。在25 °C的条件下，正常工作电流应小于等于80%的额定电流。例如，额定电流为1 A的熔断器不推荐在大于800 mA的电路中使用。如果环境温度较高，则需进一步降额使用。 The normal operating current of a circuit is the level of current drawn (in RMS or dc amperes) after it has been energized and is operating under normal conditions. An operating current of 80% or less of rated current is recommended for operation at 25 °C to avoid nuisance openings. For example, a fuse with a Rated Current of 1 A is usually not recommended in circuits with normal operating currents of more than 800 mA. Further derating is required at elevated ambient Temp.. —(UL 248)
标称熔化热能 **Ampere Squared Seconds I^2t**	在电流平方对给定时间间隔的积分，被称为I^2t。它是熔断所需的热能。熔断I^2t可以是熔化I^2t，飞弧I^2t，或二者之和。 The melting, arcing, or clearing integral of a fuse, termed I^2t, is the thermal energy required to melt, arc, or clear a specific current. It can be expressed as melting I^2t, arcing I^2t or the sum of them, clearing I^2t. —(IEC 60127)
过载 **Overload**	电流超过额定负荷的2到5倍，且保持正常的电流路径。 Can be classified as an overcurrent which exceeds the normal full load current of a circuit by 2 to 5 times its magnitude and stays within the normal current path. —(UL 248)
过电流 **Overcurrent**	在一个电路中，超过正常负载电流的电流称为过电流。过电流包括过载电流和短路电流。 A condition which exists in an electrical circuit when the normal load current is exceeded. Overcurrent take on two separate characteristics-overloads and short circuits. —(UL 248)
短路 **Short Circuit**	将短路是电流不流过正常电路而引起的过电流，它大大超出了正常满载电流数十、数百甚至数千倍。 An overcurrent that leaves the normal current path and greatly exceeds the normal full load current of the circuit by a factor of tens, hundreds, or thousands times. —(UL 248)
飞弧时间 **Arcing Time**	从出现电弧的瞬间到最终电弧熄灭的瞬间所间隔的时间。 The amount of time from the instant the fuse link has melted until the overcurrent is interrupted, or cleared. —(IEC 60127)
熔断时间 **Clearing Time**	熔化时间和飞弧时间之和。 The total time between the beginning of the overcurrent and the final opening of the circuit at rated voltage by an overcurrent protective device. Clearing time is the total of the melting time and the arcing time. —(IEC 60127)
分断能力 **Breaking Capacity of a Fuse-link**	在规定的使用和性能条件下，熔断器在规定电压下能分断的预期电流值（对交流为有效值）。 Value (r.m.s. for AC) of prospective current that a fuse-link is capable of breaking at a stated voltage under prescribed conditions of use and behaviour. —(IEC 60127)

Miniature Fuses

厦门赛尔特电子有限公司版权所有
All Rights Reserved by Xiamen SET Electronics Co., Ltd. 2021-2023 V2.2

过电流保护选型 Selection Guide Of Overcurrent Protection

在正常负载条件下，熔断器必须在电路中正常工作。然而，当过电流时熔断器必须断开电路和承受内部电弧。

Under normal load conditions, the fuse must carry the normal operating current of the circuit without nuisance openings. However, when an overcurrent occurs, the fuse must interrupt the overcurrent and withstand the voltage across the fuse after internal arcing.

正确选择熔断器必须考虑以下项目:

To properly select a fuse, the following items must be considered:

- 额定电压（交流或直流） Rated Voltage (AC or DC)
- 额定电流 Rated Current
- 正常工作电流 Normal Operating Current
- 环境温度 Ambient Temp.
- 过载条件和熔断时间 Overload Conditions and Opening Time
- 短路电流 Available Short Circuit Current
- 熔化热能值 Ampere Squared Seconds(I^2t)
- 脉冲和浪涌特性 Pulse and Inrush Characteristics
- 被保护设备或部件的特性 Characteristics of Protected Equipment or Components
- 安装空间和外形尺寸 Available Board Space and Physical Size
- 标准要求 Standards Requirements

Miniature Fuses

选型流程 Selection Process

步骤 Procedure	解释 Explanation
开始 Start	准备相关设计信息。 Prepare related design information.
安规认证 Safety Approval	根据整机所需的安规认证决定熔断器的安规认证，在此，可初步确定选用IEC规格或UL规格熔断器。 The safety approvals of the fuse shall be determined by the requirement of the end product. Therefore, it is determined preliminarily to choose fuse of IEC standard or UL standard.
尺寸 Dimensions	● 设计时电路中空间的限制。 The space limit of circuit in design. ● 安装方式。 Mounting mode.
额定电压 Rated Voltage	额定电压应大于等于有效的电路电压。 The rated voltage of the fuse shall be greater than, or equal to the effective circuit voltage.
分断能力 Breaking Capacity	分断能力的电流应大于电路中的最大故障电流。 The Breaking Capacity of the fuse should exceed the max. fault current of the circuit.

厦门赛尔特电子有限公司版权所有
All Rights Reserved by Xiamen SET Electronics Co., Ltd. 2021-2023 V2.2

初步选择型号 Initial Selection for Fuse Type	整机开关机时，电路中是否存在开机浪涌？开机浪涌在某些电路中是正常的，这种场合应使用慢断型。 Is there inrush current in the circuit when the machine is turned on and off? In some circuit, the inrush current is normal, so time-lag fuse should be used in such case.
确定额定电流上限I_U Upper Limit for Rated Current I_U	熔断器必须切断的电流及持续时间（该条件由设计人员依具体电路的保护需求而定），参考相应型号的时间电流曲线，取满足要求的最大额定电流作为上限值I_U。 For the current that the fuse must cut off and its duration, please refer to the time-current curve of the corresponding model, and take the max. rated current, which meets the requirement, as the upper limit I_U. Such conditions are determined by the designer according to the protection requirement of the specific circuit.
确定额定电流下限 I_L Lower Limit for Rated Current I_L	● 通过熔断器的稳态电流（依具体电路而定）。 Steady state current through a fuse (based on the specific circuit). ● IEC规格及UL规格熔断器的额定电流的差别，参考“稳态电流”。 The difference of rated current for fuse designed to IEC standard and UL standard, refer to STEADY STATE CURRENT. ● 环境温度对熔断器承载能力的影响，参考“环境温度”。 Effect of ambient Temp. on current-carrying capacity of fuse, refer to AMBIENT TEMP.. ● 脉冲（冲击电流、浪涌电流、起动电流、及电流瞬变值等）对熔断器寿命的影响，参考“脉冲”。 Effect of pulse (including surge currents, starting current, inrush currents and transients) on life time of fuse, refer to PULSE. ● 起动电流及持续时间与相应型号的时间电流曲线比较。 “Starting current” and duration should be compared to time-current curve of corresponding fuse. 综合考虑以上5个因素后，选出满足要求的最小额定电流作为下限I_L。 According to the above 5 factors, to select the min. rated current which meets the requirement as the lower limit of I_L.
SET Mini Fuses具体型号及电流 SET Mini Fuses Model & Rated Current	综合考虑以上因素后，选出最合适的型号及额定电流。 According to the above factors, choose the most appropriate model and rated current. ● 当$I_U \geq I_L$时，则可选用I_L到I_U区间内的任何一规格的熔断器。 When $I_U \geq I_L$, any rating is workable from the range of I_L to I_U. ● 当$I_U < I_L$时，则建议选用其它型号的熔断器。 When $I_U < I_L$, recommend to select another type fuse.
验证 Verifying	样品应在实际电路中试运行。 The sample shall be pilot run in the actual circuit.
完成 End	

Miniature Fuses

厦门赛尔特电子有限公司版权所有
All Rights Reserved by Xiamen SET Electronics Co., Ltd. 2021-2023 V2.2

稳态电流 Steady State Current

在实际应用中和实验室之间有不同的条件，如：

There are different conditions in actual application and laboratory test, such as:

- 有时使用熔断器盒；
  Fuse-holder;
- 电路中的电线横截面积；
  Connecting cable size;
- 熔断器夹的接触电阻等。
  Contacting resistance between fuse clip and fuse, etc.

考虑到以上因素，故在25 °C条件下所选用的熔断器应满足如下条件才可使熔断器持续可靠地工作：

Considering above factors, when selecting a fuse at a 25 °C ambient Temp., to ensure the fuse operated continuously and properly, the following conditions shall be required:

- IEC规格：熔断器的额定电流I_N=稳态电流/0.9。
  Fuse designed to IEC standard: Rated Current (I_N) = steady state current of circuit/0.9.
- UL规格：熔断器的额定电流I_N=稳态电流/0.75。
  Fuse designed to UL standard: Rated Current (I_N) = steady state current of circuit/0.75.

环境温度 Ambient Temperature

熔断器的电流承载能力测试是在环境温度25 °C条件下进行的，而熔断器的电流承载能力是会受环境温度影响的。环境温度越高，熔断器的寿命越短，承载能力就越低。所以选用熔断器时应考虑熔断器周边的环境温度，环境温度对各类熔断器承载能力的影响如下图所示：

The current carrying capacity tests of a fuse are performed at 25 °C and will be effected by the changes of the ambient Temp.. The higher the ambient Temp. is, the shorter the fuse life time will be, and the lower the current carrying capacity will be. So the ambient Temp. shall be considered for proper fuse selection. Refer to the following charts showing its effect on the current carrying capacity of all kinds of fuse:

- 图1表示环境温度对传统慢断及中等慢断型熔断器承载能力及5I_N熔断时间的影响。
  Fig.1 effect on rating and opening time in 5I_N of traditional time-lag and medium Time-Lag fuse.
- 图2表示环境温度对快速熔断型熔断器承载能力及5I_N熔断时间的影响。
  Fig.2 effect on rating and opening time in 5I_N of fast acting fuse.

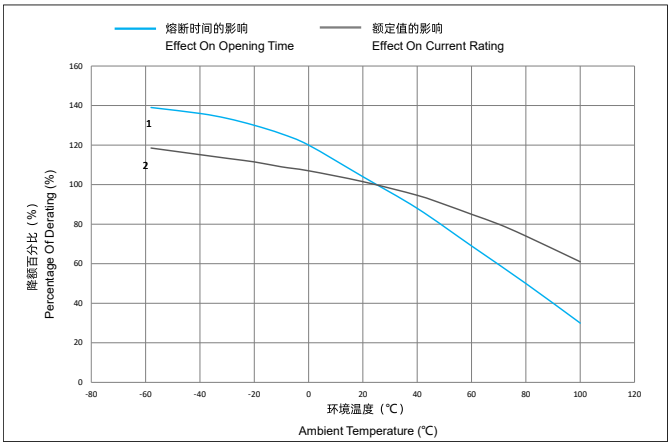

图1 FIGURE 1

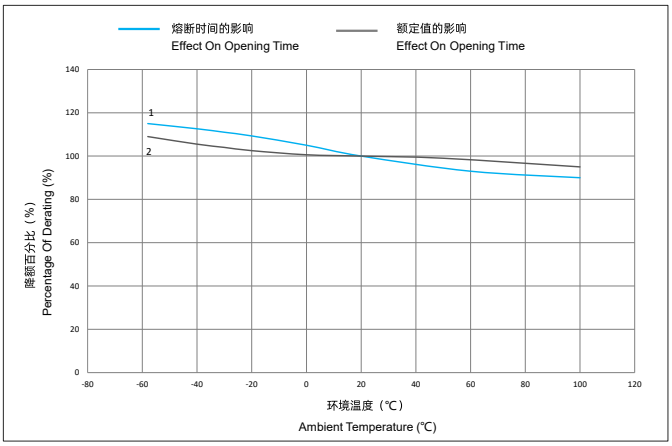

图2 FIGURE 2

脉冲 Pulse

脉冲产生的热循环，从而产生机械疲劳影响熔断器的寿命。设计时应使脉冲I^2t远远小于熔断器标称熔化热能I^2t。熔断器寿命（可承受的脉冲循环次数）与U（脉冲I^2t值与熔断器I^2t值之比率）的关系参照表A。表B提供各种典型脉冲波形的I^2t值近似计算公式：

Pulse produces thermal cycling and mechanical fatigue which could affect the life time of fuse. The selected fuse should have an I^2t value much greater than the I^2t value of pulse. Refer to Table A showing the relationship between the life time of fuse (the endurable times of pulse shock) and U (ratio between pulse I^2t value and fuse I^2t value). The I^2t value of a fuse presented in this catalog may be for your reference. The I^2t value of a pulse can be approximated from the following formulas for a typical wave shape, refer to Table B.

Miniature Fuses

厦门赛尔特电子有限公司版权所有
All Rights Reserved by Xiamen SET Electronics Co., Ltd. 2021-2023 V2.2

表1 TABLE 1

可承受脉冲次数 Endurable times of pulse shock	U（比率Ratio）
100000	20%
10000	30%
1000	40%

注：脉冲间隔时间必须足够长（5 s – 10 s），以利于脉冲产生的热量散失。

Note: Adequate interval (5 s - 10 s) must be required between pulse events to allow the heat from the previous event to dissipate.

表2 TABLE 2

波形 Wave Shape	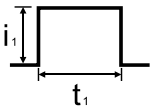 矩形波 Rectangle wave	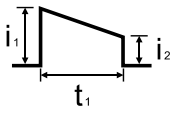 梯形波 Trapezoid wave	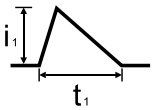 三角形波 Triangle wave	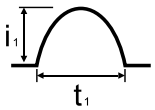 正弦波 Sine wave	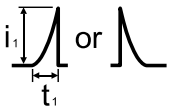 变形波 Distortion wave	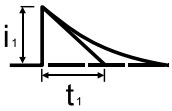 充、放电波 Charge or Discharge wave
I^2t计算公式 I^2t Formula	$i_1^2t_1$	$(1/3)(i_1^2+i_1i_2+i_2^2)t_1$	$(1/3)i_1^2t_1$	$(1/2)i_1^2t_1$	$(1/5)i_1^2t_1$	$(1/2)i_1^2t_1$

验证 Verifying

所选定的产品必须在实际被保护电路中进行测试，以验证所选择的熔断器。此验证应包括正常条件及故障条件下的测试，以确保所选择的熔断器在被保护电路中能正常运行。

The selected sample shall be tested in the actual circuit to verify the right selection. The testing should include the tests under normal and fault conditions to ensure that the fuse will operate properly in the circuit.

厦门赛尔特电子有限公司版权所有
All Rights Reserved by Xiamen SET Electronics Co., Ltd. 2021-2023 V2.2

注意

ATTENTION

检测 Inspection

冷电阻测试 Cold Resistance Test

a. 环境温度为(23±2) °C，测试电流不大于熔断器额定电流的10%。

Applied current shall be less than 10% of rated current, at ambient Temp. of (23±2) °C.

b. 采用四端测试法 (4-Wire) Resistance Measurement.

使用 Usage

a. 通电情况下请勿直接触碰熔断器本体或引线，防止烫伤或触电。

Do not touch the fuse body or lead wire when power on, avoiding scald or electric shock.

b. 气压在80 kPa 到106 kPa，对应海拔为+2000 m至- 500 m。

Air pressure is 80 kPa to 106 kPa. These values represent an altitude of +2000 m to -500 m, respectively.

更换 Replacement

基于安全原因，熔断器是不可修复的产品，替换时应使用同类别同型号的产品。

For safety reasons, the Fuse is the non-resettable product, please ensure that the alternative Fuse is the same type when replace it.

贮存 Storage

熔断器的贮存应避免高温、高湿、日光直射和腐蚀性气体的场合，以免影响引脚可焊性，产品购入后请于1年内使用完毕。

Please store the fuse in the environment without high temperature, high humidity or corrosive gas, to avoid reducing the solderability of the lead wire. Please use them up within 1 year after receiving the goods.

厦门赛尔特电子有限公司版权所有
All Rights Reserved by Xiamen SET Electronics Co., Ltd. 2021-2023 V2.2

安装 Installation

机械应力 Mechanical stress

安装过程和安装后不宜对熔断器本体施加机械应力。

Do not apply mechanical stress to the fuse body during or after the installation.

焊接参数 Soldering Parameters

波峰焊参数 Wave soldering Parameters (仅供参考 For Reference Only)

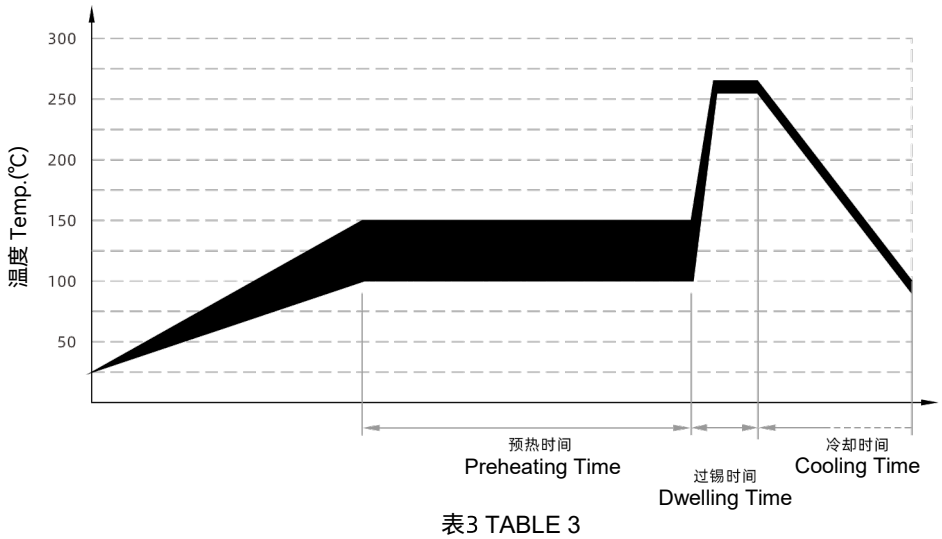

表3 TABLE 3

项目 Item	温度 Temp. （°C）	时间 Time （s）
预热 Preheating	100 - 150	60 - 180
过锡 Dwelling	255 - 265	4 - 8

推荐的手工焊参数 Recommended Soldering Parameters

烙铁温度 Solder Iron Temp.：(350 ± 5) °C

焊接时间 Soldering Time：≤ 5 s

引脚弯曲 Lead Wire Bending

如果要弯折引脚，那么应确保弯折处与主体间的距离，如下表。
If the lead wire has to be bent, please pay attention to the distance between body and the bending point. Refer to the following table.

径向型 Radial Type
尺寸 Dimension (mm) 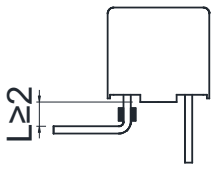

安装位置 Installation Position

勿将熔断器安装在可能经常出现剧烈振动的位置。
Do not install the fuse on a location that may often subject to severe continuous vibration.

厦门赛尔特电子有限公司版权所有
All Rights Reserved by Xiamen SET Electronics Co., Ltd. 2021-2023 V2.2

超小型熔断体
Sub-miniature Fuse-links (SFL)

SPF478系列 Series，快断 Fast Acting，塑料壳 Plastic Case

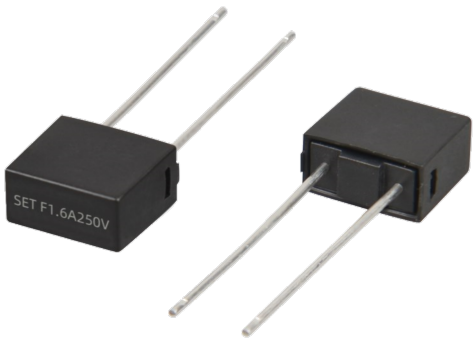

尺寸 Dimensions (mm)

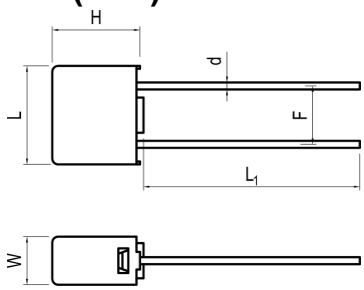

L	L_1	W	H	d	F
8.4±0.5	18.5±1.0	4.1±0.3	7.35±0.50	Φ0.60±0.05	5.08±0.20

关键特性 Key Features

- 体积小 Miniature Size
- 快断 Fast Acting
- 执行标准：IEC 60127-3/Sheet 3、UL248-14
  Designed to IEC 60127-3/Sheet 3 and UL248-14
- 无铅 Lead-free (Pb-free)
- 环保型产品 RoHS & REACH Compliant

应用 Applications

- 电源 Power Supply
- 家电 Household Appliance
- 通用照明 General Lighting
- 智能家居 Smart Home
- 办公设备 Office Equipment
- 电动工具 Electric Tool
- 医疗设备 Medical Equipment
- 仪器仪表 Instruments and Apparatuses

型号说明 Product Number System

SPF478 F 1A 250V

- 额定电压 Rated Voltage
- 额定电流 Rated Current
- 快断 Fast Acting
- 产品系列 Product Series

结构图 Structure

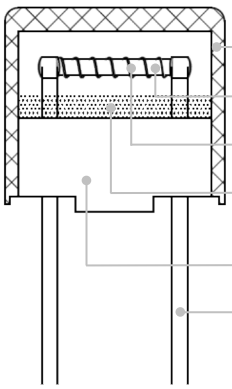

- 外壳 Case
- 纤维线 Fiber Wire
- 熔体 Element
- 填料 Filler
- 底座 Base
- 引线 Radial Lead

安规认证 Agency Approvals

安规认证 Agency Approvals	认证号 Agency File Number	电流范围 Ampere Range
c UL us	待定 Pending	1 A ~ 10 A
DVE	待定 Pending	1 A ~ 10 A
CCC	待定 Pending	1 A ~ 10 A

时间电流特性曲线 Time Current Curve

仅供参考 For Reference Only

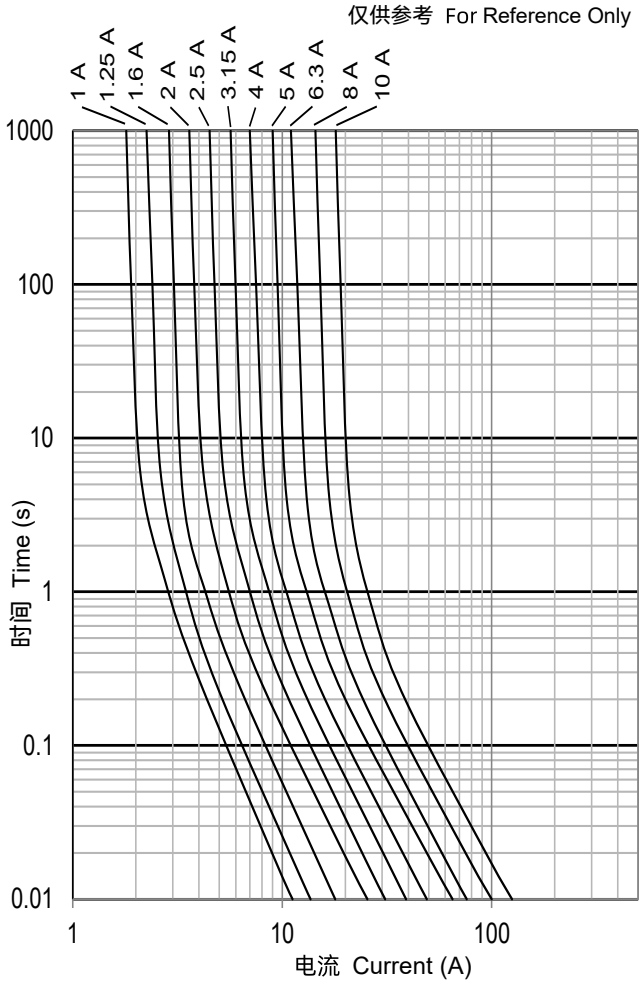

厦门赛尔特电子有限公司版权所有
All Rights Reserved by Xiamen SET Electronics Co., Ltd. 2021-2023 V2.2

Miniature Fuses

技术参数 Specifications

系列 Series	额定电流 Rated Current	最大压降 Max. Voltage Drop [a]	平均熔化热能值 Average Typical Melting I^2t [b]	安规认证 Agency Approvals			环境 Environmental	
				CCC	VDE	cURus	RoHS	REACH
	(A)	(mV)	(A^2sec)	CCC	VDE	cURus		
SPF478	1	280	1.4	○	○	○	●	●
SPF478	1.25	280	2.1	○	○	○	●	●
SPF478	1.6	250	3.6	○	○	○	●	●
SPF478	2	240	6.8	○	○	○	●	●
SPF478	2.5	200	11.3	○	○	○	●	●
SPF478	3.15	180	18.9	○	○	○	●	●
SPF478	4	160	27.2	○	○	○	●	●
SPF478	5	150	50	○	○	○	●	●
SPF478	6.3	130	59.5	○	○	○	●	●
SPF478	8	100	103	○	○	○	●	●
SPF478	10	85	170	○	○	○	●	●

a: 最大压降（环境温度23 °C时，在额定电流下测得）。
Max. Voltage Drop (voltage drop was measured at 23 °C ambient temp. at rated current).

b: I^2t是在10倍额定电流测试下得到的。I^2t value is measured at 10 I_N.

分断能力 Breaking Capacity:

IEC标准Standard: 35 A @ 250 Vac or 10 I_N @ 250 Vac Whichever is Greater

UL标准Standard: 150 A @ 125 V / 250 V / 300 V / 350 V / 400 V

○: 待定 Pending

熔断特性 Pre-arcing Time/Current Characteristic

额定电流 Rated Current	2.1I_N	2.75I_N		4I_N		10I_N
	最大 Max.	最小 Min.	最大 Max.	最小 Min.	最大 Max.	最大 Max.
1 A ~ 5 A	30 minutes	10 ms	3 s	3 ms	300 ms	20 ms
6.3 A ~ 10 A	30 minutes	50 ms	10 s	5 ms	400 ms	20 ms

+86 592-571-5838 www.SETsafe.com www.SETfuse.com E-mail : sales@SETfuse.com

厦门赛尔特电子有限公司版权所有
All Rights Reserved by Xiamen SET Electronics Co., Ltd. 2021-2023 V2.2

包装信息 Packaging Information

尺寸 Dimensions (mm)

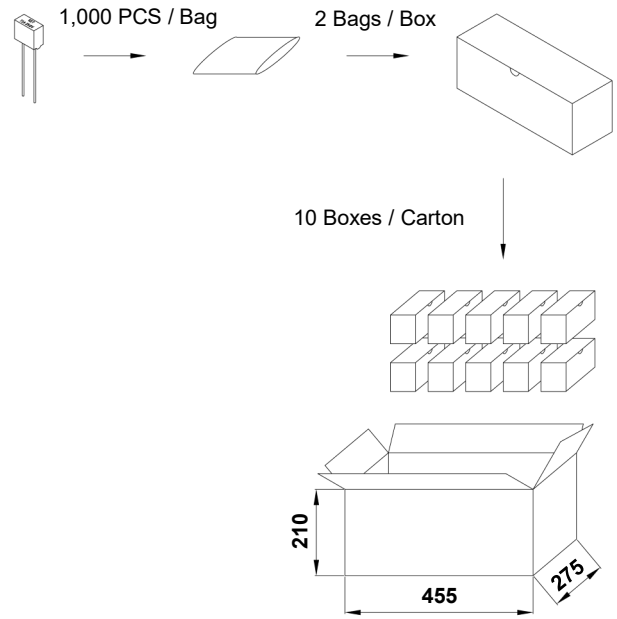

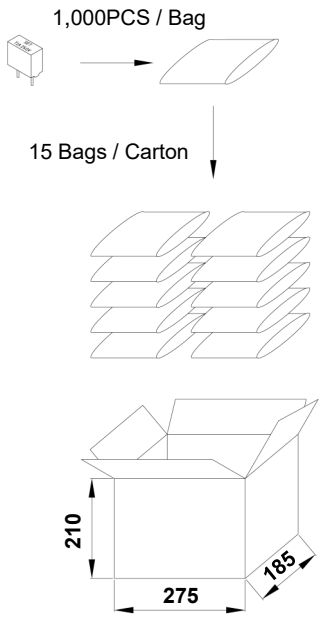

长脚 Long Leg			
项目 Item	PE袋 Bag	盒 Box	箱 Carton
数量 Q'ty (PCS)	1,000	2,000	20,000
毛重 Gross Weight (kg)		8.0 ± 10%	

短脚 Short Leg		
项目 Item	PE袋 Bag	箱 Carton
数量 Q'ty (PCS)	1,000	15,000
毛重 Gross Weight (kg)		4.6 ± 10%

尺寸 Dimensions (mm)

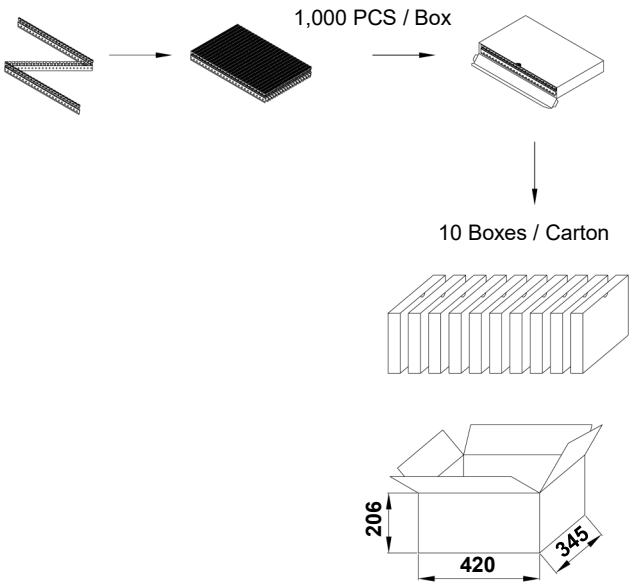

编带 Taping		
项目 Item	盒 Box	箱 Carton
数量 Q'ty (PCS)	1,000	10,000
毛重 Gross Weight (kg)		6.0 ± 10%

+86 592-571-5838 www.SETsafe.com www.SETfuse.com E-mail : sales@SETfuse.com

厦门赛尔特电子有限公司版权所有
All Rights Reserved by Xiamen SET Electronics Co., Ltd. 2021-2023 V2.2

超小型熔断体
Sub-miniature Fuse-links (SFL)

SPT478系列 Series，慢断 Time-Lag，塑料壳 Plastic Case

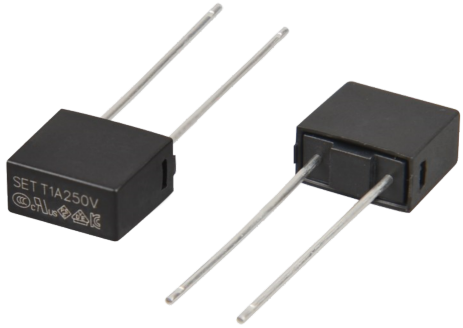

尺寸 Dimensions (mm)

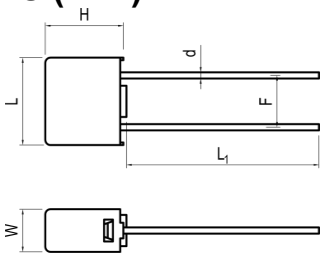

L	L_1	W	H	d	F
8.4±0.5	18.5±1.0	4.1±0.3	7.35±0.50	Φ0.60±0.05	5.08±0.20

关键特性 Key Features

- 体积小 Miniature Size
- 慢断 Time-Lag
- 抗浪涌 Surge Protection
- 执行标准：IEC 60127-3/Sheet 4、UL248-14
  Designed to IEC 60127-3/Sheet 4 and UL248-14
- 无铅 Lead-free (Pb-free)
- 环保型产品 RoHS & REACH Compliant

应用 Applications

- 电源 Power Supply
- 家电 Household Appliance
- 防雷器 SPD
- 通用照明 General Lighting
- 智能家居 Smart Home
- 办公设备 Office Equipment
- 电动工具 Electric Tool

型号说明 Product Number System

SPT478 T 1A 250V

- 额定电压 Rated Voltage
- 额定电流 Rated Current
- 慢断 Time-Lag
- 产品系列 Product Series

结构图 Structure

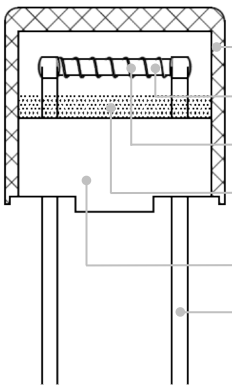

- 外壳 Case
- 纤维线 Fiber Wire
- 熔体 Element
- 填料 Filler
- 底座 Base
- 引线 Radial Lead

安规认证 Agency Approvals

安规认证 Agency Approvals	认证号 Agency File Number	电流范围 Ampere Range
c UL us	E345932	100 mA ~ 10 A
VDE	40049409	100 m A ~ 10 A
PSE	PSE18021398 PSE18021397	1 A ~ 5 A 6.3 A ~ 10 A
CCC	2020980207000070[a]	100 m A ~ 10 A
KC	SU05023-18002 SU05023-18005 SU05023-18001 SU05023-18003 SU05023-18004	100 mA 125 mA ~ 800 mA 1 A ~ 2.5 A 3.15 A ~ 6.3 A 8 A ~ 10 A

备注：“a”为强制性认证产品符合性自我声明编号。
Remark: “a” is self-declaration number for conformity of Compulsory certification products.

时间电流特性曲线 Time Current Curve

仅供参考 For Reference Only

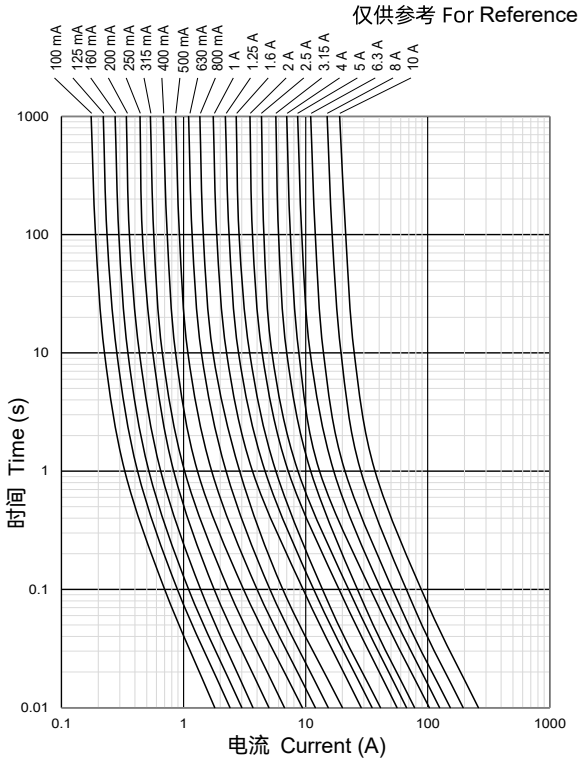

厦门赛尔特电子有限公司版权所有
All Rights Reserved by Xiamen SET Electronics Co., Ltd. 2021-2023 V2.2

Miniature Fuses

技术参数 Specifications

系列 Series	额定电流 Rated Current	最大压降 Max. Voltage Drop [a]	平均熔化热能值 Average Typical Melting I^2t [b]	安规认证 Agency Approvals					环境 Environmental	
				CCC	VDE	KC	PSE	cURus	RoHS	REACH
	(A)	(mV)	(A²sec)							
SPT478	0.1	350	0.039	●	●	●		●	●	●
SPT478	0.125	300	0.069	●	●	●		●	●	●
SPT478	0.16	280	0.11	●	●	●		●	●	●
SPT478	0.2	260	0.16	●	●	●		●	●	●
SPT478	0.25	240	0.29	●	●	●		●	●	●
SPT478	0.315	220	0.5	●	●	●		●	●	●
SPT478	0.4	200	0.91	●	●	●		●	●	●
SPT478	0.5	190	1.51	●	●	●		●	●	●
SPT478	0.63	180	2.38	●	●	●		●	●	●
SPT478	0.8	160	3.78	●	●	●		●	●	●
SPT478	1	140	9.0	●	●	●	●	●	●	●
SPT478	1.25	130	13.3	●	●	●	●	●	●	●
SPT478	1.6	120	17.9	●	●	●	●	●	●	●
SPT478	2	100	34.8	●	●	●	●	●	●	●
SPT478	2.5	100	49.4	●	●	●	●	●	●	●
SPT478	3.15	100	66.5	●	●	●	●	●	●	●
SPT478	4	100	112	●	●	●	●	●	●	●
SPT478	5	100	165	●	●	●	●	●	●	●
SPT478	6.3	100	250	●	●	●	●	●	●	●
SPT478	8	80	416	●	●	●	●	●	●	●
SPT478	10	75	750	●	●	●	●	●	●	●

a: 最大压降（环境温度23 °C时，在额定电流下测得）。
Max. Voltage Drop (voltage drop was measured at 23 °C ambient temp. at rated current).

b: I^2t是在10倍额定电流测试下得到的。I^2t value is measured at 10 I_N.

分断能力 Breaking Capacity:

CCC / VDE / PSE / KC: 35 A @ 250 Vac or 10 I_N @ 250 Vac Whichever is Greater

UL / cUL: 150 A @ 125 V / 250 V / 300 V / 350 V / 400 V

熔断特性 Pre-arcing Time/Current Characteristic

额定电流 Rated Current	2.1I_N	2.75I_N		4I_N		10I_N	
	最大 Max.	最小 Min.	最大 Max.	最小 Min.	最大 Max.	最小 Min.	最大 Max.
0.1 A ~ 6.3 A	2 minutes	400 ms	10 s	150 ms	3 s	20 ms	150 ms
8 A ~ 10 A	5 minutes	1 s	20 s	150 ms	3 s	20 ms	150 ms

厦门赛尔特电子有限公司版权所有
All Rights Reserved by Xiamen SET Electronics Co., Ltd. 2021-2023 V2.2

包装信息 Packaging Information

尺寸 Dimensions (mm)

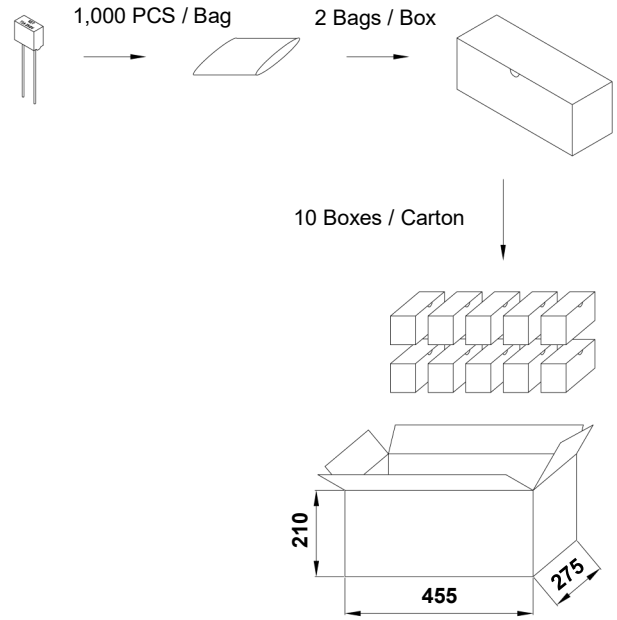

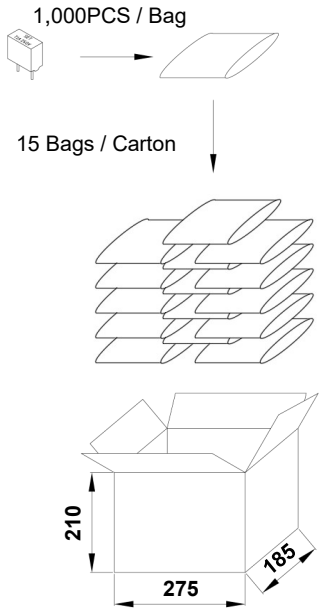

长脚 Long Leg			
项目 Item	PE袋 Bag	盒 Box	箱 Carton
数量 Q'ty (PCS)	1,000	2,000	20,000
毛重 Gross Weight (kg)		7.6 ± 10%	

短脚 Short Leg		
项目 Item	PE袋 Bag	箱 Carton
数量 Q'ty (PCS)	1,000	15,000
毛重 Gross Weight (kg)		4.6 ± 10%

尺寸 Dimensions (mm)

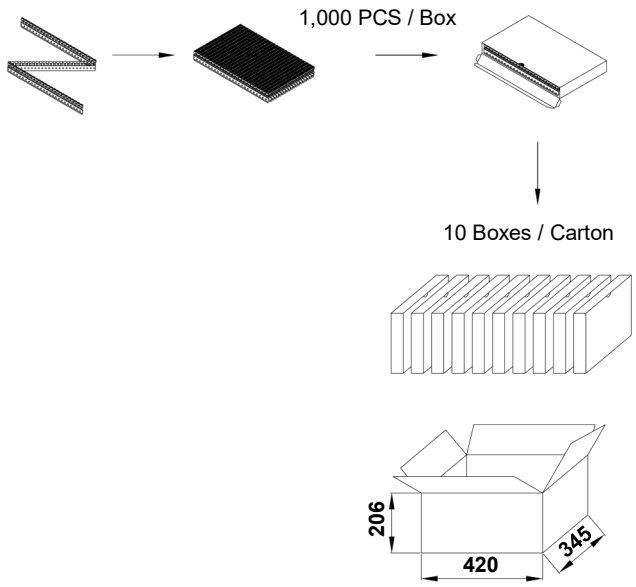

编带 Taping		
项目 Item	盒 Box	箱 Carton
数量 Q'ty (PCS)	1,000	10,000
毛重 Gross Weight (kg)		6.0 ± 10%

+86 592-571-5838 www.SETsafe.com www.SETfuse.com E-mail : sales@SETfuse.com

厦门赛尔特电子有限公司版权所有
All Rights Reserved by Xiamen SET Electronics Co., Ltd. 2021-2023 V2.2

贴片熔断体
Surface Mount Fuse-links (SMFL)

特征 Features

- 陶瓷管 — Ceramic Tube
- 快断与慢断 — Fast Acting and Time-Lag
- 额定电流：(0.1 ~ 40) A — Rated Current: (0.1 to 40) A
- 额定电压：(125 ~ 350) VAC (24 ~ 250) VDC — Rated Voltage: (125 to 350) VAC (24 to 250) VDC
- 低分断 — Low Breaking Capacity
- 无铅且符合RoHs＆REACH要求 — Lead-free (Pb-free), RoHS & REACH Compliant

厦门赛尔特电子有限公司版权所有
All Rights Reserved by Xiamen SET Electronics Co., Ltd. 2021-2023 V2.1

贴片熔断体
Surface Mount Fuse-links (SMFL)

贴片熔断体特性与型号概览
Surface Mount Fuse-lingks (SMFL) Feature & Model List Overview

额定电流 Rated Current (A) \ 型号 Model	12	15	18	21
50.00	○	○	○	○
40.00	○	○	SCF1032F40A	○
30.00	○	○	SCF1032F30A	○
25.00	○	○	SCF1032F25A	○
21.00	○	○	○	○
20.00	SCF6125F20A	○	SCF1032F20A	○
16.00	SCF6125F16A	○	SCF1032F16A	○
15.00	SCF6125F15A	○	SCF1032F15A	SCT1032T15A
13.00	○	○	○	○
12.50	SCF6125F12.5A	SCT6125T12.5A	SCF1032F12.5A	SCT1032T12.5A
12.00	SCF6125F12A	SCT6125T12A	SCF1032F12A	SCT1032T12A
10.00	SCF6125F10A	SCT6125T10A	SCF1032F10A	SCT1032T10A
8.00	SCF6125F8A	SCT6125T8A	SCF1032F8A	SCT1032T8A
7.00	○	○	○	○
6.30	SCF6125F6.3A	SCT6125T6.3A	SCF1032F6.3A	SCT1032T6.3A
6.00	○	○	○	○
5.00	SCF6125F5A	SCT6125T5A	SCF1032F5A	SCT1032T5A
4.00	SCF6125F4A	SCT6125T4A	SCF1032F4A	SCT1032T4A
3.15	SCF6125F3.15A	SCT6125T3.15A	SCF1032F3.15A	SCT1032T3.15A
3.00	SCF6125F3A	SCT6125T3A	SCF1032F3A	SCT1032T3A
2.50	SCF6125F2.5A	SCT6125T2.5A	SCF1032F2.5A	SCT1032T2.5A
2.00	SCF6125F2A	SCT6125T2A	SCF1032F2A	SCT1032T2A
1.60	SCF6125F1.6A	SCT6125T1.6A	SCF1032F1.6A	SCT1032T1.6A
1.25	○	SCT6125T1.25A	SCF1032F1.25A	SCT1032T1.25A
1.00	○	SCT6125T1A	SCF1032F1A	SCT1032T1A
0.80	○	SCT6125T800mA	○	SCT1032T800mA
0.63	○	SCT6125T630mA	○	SCT1032T630mA
0.50	○	SCT6125T500mA	○	SCT1032T500mA
0.40	○	SCT6125T400mA	○	SCT1032T400mA
0.315	○	SCT6125T315mA	○	SCT1032T315mA
0.25	○	SCT6125T250mA	○	SCT1032T250mA
0.20	○	SCT6125T200mA	○	SCT1032T200mA
0.16	○	○	○	SCT1032T160mA
0.125	○	○	○	SCT1032T125mA
0.10	○	○	○	SCT1032T100mA
U_r(VAC)(VDC) 额定电压 Rated Voltage	(125 ~ 350) VAC / (24 ~ 125) VDC		(125 ~ 350) VAC / (32 ~ 250) VDC	
时间特性 Time Feature	快断 Fast Acting	慢断 Time-Lag	快断 Fast Acting	慢断 Time-Lag
管身材质 Tube Material	陶瓷 Ceramic			
标准 Standards	IEC / UL			
分断能力 Breaking Capacity	50 A ~ 500 A		100 A ~ 1000 A	
外形尺寸(mm) Physical Size	2.7 × 2.7 × 6.3		3.2 × 3.2 × 10.3	
产品结构 Product Structure	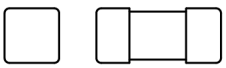		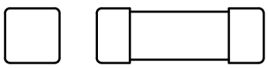	

Miniature Fuses

厦门赛尔特电子有限公司版权所有
All Rights Reserved by Xiamen SET Electronics Co., Ltd. 2021-2023 V2.1

贴片熔断体
Surface Mount Fuse-links (SMFL)

产品描述 Description

小型熔断器(Miniature Fuses)是一种小型的过电流保护装置。它串联在电路中，一般要求电阻小（功耗小），当电路正常工作时，它相当于一根导线，能够长时间稳定地导通电路；当电路不稳定或外部干扰而发生电流波动时，它也应能承受一定范围的过载；只有当电路中出现明显的过载或短路时，小型熔断器(Miniature Fuses)才会动作，通过切断电流来保护电路。
赛尔特公司的小型熔断器(Miniature Fuses)广泛应用于各种电子电器设备的过电流保护，其具有多种安装方式、结构紧凑、性能可靠稳定等特点。赛尔特可提供的小型熔断器(Miniature Fuses)的技术参数：额定电流（0.1~40）A，额定电压（125~600）VAC、（24~600）VDC，安规认证包括cURus、VDE、PSE、CCC、CQC、KC、TUV，同时满足RoHS、REACH要求。

Miniature Fuses is an Over Current Protection device. It is connected in series in the circuit and generally requires low resistance (low power consumption). When the circuit works normally, it is equivalent to a wire, which can conduct the circuit continuously and stably. When the current fluctuates due to circuit instability or external interference, it should also be able to withstand a certain range of overload. Only when overload or short circuit happens, Miniature Fuses can blow fast to protect the circuit.
SETsafe | SETfuse Miniature Fuses is widely used in all kinds of electrical equipment. It has a variety of mounting modes, compact structure, reliable and stable performance. Technical parameters of SETsafe | SETfuse Miniature Fuses: Its rated current ranges from 0.1 A to 40 A, rated voltage ranges from 125 VAC to 600 VAC, and from 24 VDC to 600 VDC, complies with RoHS and REACH, and is approved by cURus, VDE, PSE, CCC, CQC, KC, TUV.

Miniature Fuses

厦门赛尔特电子有限公司版权所有
All Rights Reserved by Xiamen SET Electronics Co., Ltd. 2021-2023 V2.1

术语 Glossary

项目 Item	描述 Description
熔断器 **Fuse**	一种装置，当通过该装置的电流超过规定值，并持续足够的时间，该装置中一个或多个经特殊设计、特殊配比的部件熔断，断开其所接入的电路，从而切断电流。 A device, by the fusing of one or more of its specially designed and proportioned components, opens the circuit in which it is inserted by breaking the current when this exceeds a given value for a sufficient time. —(IEC 60127)
快断型熔断器 **Fast Acting Fuse**	在过载和短路时能很快断开电路的一类熔断器。这类熔断器无法承受一些超载浪涌电流。UL认证或认可的速断型熔断器，通常在额定电流的200%到250%时，会在5秒内断开。IEC标准有两类快断型熔断器： A fuse which opens on overload and short circuits very quickly. This type of fuse is not designed to withstand temporary overload currents associated with some electrical load. UL listed or recognized fast acting fuses would typically open within 5 s when subjected to 200% to 250% of its rated current. IEC has two categories of fast acting fuses: ● F表示快速动作，10倍额定电流时，能在0.001 s到0.01 s之间断开。 F = Fast acting, opens on 10 times rated current within 0.001 s to 0.01 s. ● FF表示非常快速动作,10倍额定电流时，能在0.001 s以内断开。 FF = Very fast acting, opens on 10 times rated current within less than 0.001 s. —(UL 248)
延时型熔断器 **Time-Lag Fuse**	内置时间延迟，允许暂时的、无害的浪涌电流通过而不动作的一类熔断器。在设计时持续过载和短路电流情况下的断开时间应该是：UL认证或认可的延时型熔断器在额定电流的200%到250%下，会在2分钟内断开。IEC标准有两种延时型熔断器： A fuse with a built-in delay that allows temporary and harmless inrush currents to pass without operating. In design, the breaking time under the condition of continuous overload and short-circuit current shall be: UL listed or recognized time delay fuses typically open in 2 minutes Max. when subjected to 200% to 250% of rated current. IEC has two categories of time delay fuses: ● T表示延时，10倍额定电流时，能在0.01 s到0.3 s之间断开。 T = Time-Lag, opens on 10 times rated current within 0.01 s to 0.3 s. ● TT表示长延时，10倍额定电流时，能在0.1 s到1 s之间断开。 TT = Long Time-Lag, opens on 10 times rated current within 0. 1 s to 1 s. —(UL 248)
额定电流 **Rated Current**	熔断器的额定电流是根据其可控制测试条件的截流能力确定的。每个熔断器上都应标上额定电流，它可以是数字、字母、或色码。 The rated current of a fuse identifies its current-carrying capacity based on a controllable set of test conditions. Each fuse is marked with its rated current, this rating can be identified with a numeric, alpha, or color code mark. —(IEC 60127)
额定电压 **Rated Voltage**	熔断器可以使用的最大安全开断电压，超过额定电压将影响断开过载和短路电路的能力。 A Max. open circuit voltage in which a fuse can be used, yet safely interrupt an overcurrent. Exceeding the voltage rating of a fuse impairs its ability to clear an overload or short circuit safely. —(IEC 60127)

Miniature Fuses

厦门赛尔特电子有限公司版权所有
All Rights Reserved by Xiamen SET Electronics Co., Ltd. 2021-2023 V2.1

术语 Glossary

项目 Item	描述 Description
正常工作电流 **Normal Operating Current**	正常条件下接通电路后，电路中流过的电流被称为正常工作电流。在25 °C的条件下，正常工作电流应小于等于80%的额定电流。例如，额定电流为1 A的熔断器不推荐在大于800 mA的电路中使用。如果环境温度较高，则需进一步降额使用。 The normal operating current of a circuit is the level of current drawn (in RMS or dc amperes) after it has been energized and is operating under normal conditions. An operating current of 80% or less of rated current is recommended for operation at 25 °C to avoid nuisance openings. For example, a fuse with a Rated Current of 1 A is usually not recommended in circuits with normal operating currents of more than 800 mA. Further derating is required at elevated ambient Temp.. —(UL 248)
标称熔化热能 **Ampere Squared Seconds I^2t**	在电流平方对给定时间间隔的积分，被称为I^2t。它是熔断所需的热能。熔断I^2t可以是熔化I^2t，飞弧I^2t，或二者之和。 The melting, arcing, or clearing integral of a fuse, termed I^2t, is the thermal energy required to melt, arc, or clear a specific current. It can be expressed as melting I^2t, arcing I^2t or the sum of them, clearing I^2t. —(IEC 60127)
过载 **Overload**	电流超过额定负荷的2到5倍，且保持正常的电流路径。 Can be classified as an overcurrent which exceeds the normal full load current of a circuit by 2 to 5 times its magnitude and stays within the normal current path. —(UL 248)
过电流 **Overcurrent**	在一个电路中，超过正常负载电流的电流称为过电流。过电流包括过载电流和短路电流。 A condition which exists in an electrical circuit when the normal load current is exceeded. Overcurrent take on two separate characteristics-overloads and short circuits. —(UL 248)
短路 **Short Circuit**	将短路是电流不流过正常电路而引起的过电流，它大大超出了正常满载电流数十、数百甚至数千倍。 An overcurrent that leaves the normal current path and greatly exceeds the normal full load current of the circuit by a factor of tens, hundreds, or thousands times. —(UL 248)
飞弧时间 **Arcing Time**	从出现电弧的瞬间到最终电弧熄灭的瞬间所间隔的时间。 The amount of time from the instant the fuse link has melted until the overcurrent is interrupted, or cleared. —(IEC 60127)
熔断时间 **Clearing Time**	熔化时间和飞弧时间之和。 The total time between the beginning of the overcurrent and the final opening of the circuit at rated voltage by an overcurrent protective device. Clearing time is the total of the melting time and the arcing time. —(IEC 60127)
分断能力 **Breaking Capacity of a Fuse-link**	在规定的使用和性能条件下，熔断器在规定电压下能分断的预期电流值（对交流为有效值）。 Value (r.m.s. for AC) of prospective current that a fuse-link is capable of breaking at a stated voltage under prescribed conditions of use and behaviour. —(IEC 60127)

Miniature Fuses

厦门赛尔特电子有限公司版权所有
All Rights Reserved by Xiamen SET Electronics Co., Ltd. 2021-2023 V2.1

过电流保护选型 Selection Guide Of Overcurrent Protection

在正常负载条件下，熔断器必须在电路中正常工作。然而，当过电流时熔断器必须断开电路和承受内部电弧。

Under normal load conditions, the fuse must carry the normal operating current of the circuit without nuisance openings. However, when an overcurrent occurs, the fuse must interrupt the overcurrent and withstand the voltage across the fuse after internal arcing.

正确选择熔断器必须考虑以下项目:

To properly select a fuse, the following items must be considered:

- 额定电压（交流或直流） Rated Voltage (AC or DC)
- 额定电流 Rated Current
- 正常工作电流 Normal Operating Current
- 环境温度 Ambient Temp.
- 过载条件和熔断时间 Overload Conditions and Opening Time
- 短路电流 Available Short Circuit Current
- 熔化热能值 Ampere Squared Seconds(I^2t)
- 脉冲和浪涌特性 Pulse and Inrush Characteristics
- 被保护设备或部件的特性 Characteristics of Protected Equipment or Components
- 安装空间和外形尺寸 Available Board Space and Physical Size
- 标准要求 Standards Requirements

Miniature Fuses

选型流程 Selection Process

步骤 Procedure	解释 Explanation
开始 Start	准备相关设计信息。 Prepare related design information.
安规认证 Safety Approval	根据整机所需的安规认证决定熔断器的安规认证，在此，可初步确定选用IEC规格或UL规格熔断器。 The safety approvals of the fuse shall be determined by the requirement of the end product. Therefore, it is determined preliminarily to choose fuse of IEC standard or UL standard.
尺寸 Dimensions	● 设计时电路中空间的限制。 The space limit of circuit in design. ● 安装方式。 Mounting mode.
额定电压 Rated Voltage	额定电压应大于等于有效的电路电压。 The rated voltage of the fuse shall be greater than, or equal to the effective circuit voltage.
分断能力 Breaking Capacity	分断能力的电流应大于电路中的最大故障电流。 The Breaking Capacity of the fuse should exceed the max. fault current of the circuit.

厦门赛尔特电子有限公司版权所有
All Rights Reserved by Xiamen SET Electronics Co., Ltd. 2021-2023 V2.1

初步选择型号 Initial Selection for Fuse Type	整机开关机时，电路中是否存在开机浪涌？开机浪涌在某些电路中是正常的，这种场合应使用慢断型。 Is there inrush current in the circuit when the machine is turned on and off? In some circuit, the inrush current is normal, so time-lag fuse should be used in such case.
确定额定电流上限I_U Upper Limit for Rated Current I_U	熔断器必须切断的电流及持续时间（该条件由设计人员依具体电路的保护需求而定），参考相应型号的时间电流曲线，取满足要求的最大额定电流作为上限值I_U。 For the current that the fuse must cut off and its duration, please refer to the time-current curve of the corresponding model, and take the max. rated current, which meets the requirement, as the upper limit I_U. Such conditions are determined by the designer according to the protection requirement of the specific circuit.
确定额定电流下限 I_L Lower Limit for Rated Current I_L	● 通过熔断器的稳态电流（依具体电路而定）。 Steady state current through a fuse (based on the specific circuit). ● IEC规格及UL规格熔断器的额定电流的差别，参考“稳态电流”。 The difference of rated current for fuse designed to IEC standard and UL standard, refer to STEADY STATE CURRENT. ● 环境温度对熔断器承载能力的影响，参考“环境温度”。 Effect of ambient Temp. on current-carrying capacity of fuse, refer to AMBIENT TEMP.. ● 脉冲（冲击电流、浪涌电流、起动电流、及电流瞬变值等）对熔断器寿命的影响，参考“脉冲”。 Effect of pulse (including surge currents, starting current, inrush currents and transients) on life time of fuse, refer to PULSE. ● 起动电流及持续时间与相应型号的时间电流曲线比较。 “Starting current” and duration should be compared to time-current curve of corresponding fuse. 综合考虑以上5个因素后，选出满足要求的最小额定电流作为下限I_L。 According to the above 5 factors, to select the min. rated current which meets the requirement as the lower limit of I_L.
SET Mini Fuses具体型号及电流 SET Mini Fuses Model & Rated Current	综合考虑以上因素后，选出最合适的型号及额定电流。 According to the above factors, choose the most appropriate model and rated current. ● 当$I_U \geq I_L$时，则可选用I_L到I_U区间内的任何一规格的熔断器。 When $I_U \geq I_L$, any rating is workable from the range of I_L to I_U. ● 当$I_U < I_L$时，则建议选用其它型号的熔断器。 When $I_U < I_L$, recommend to select another type fuse.
验证 Verifying	样品应在实际电路中试运行。 The sample shall be pilot run in the actual circuit.
完成 End	

Miniature Fuses

厦门赛尔特电子有限公司版权所有
All Rights Reserved by Xiamen SET Electronics Co., Ltd. 2021-2023 V2.1

稳态电流 Steady State Current

在实际应用中和实验室之间有不同的条件，如：

There are different conditions in actual application and laboratory test, such as:

- 有时使用熔断器盒；
  Fuse-holder;
- 电路中的电线横截面积；
  Connecting cable size;
- 熔断器夹的接触电阻等。
  Contacting resistance between fuse clip and fuse, etc.

考虑到以上因素，故在25 °C条件下所选用的熔断器应满足如下条件才可使熔断器持续可靠地工作：

Considering above factors, when selecting a fuse at a 25 °C ambient Temp., to ensure the fuse operated continuously and properly, the following conditions shall be required:

- IEC规格：熔断器的额定电流I_N=稳态电流/0.9。
  Fuse designed to IEC standard: Rated Current (I_N) = steady state current of circuit/0.9.
- UL规格：熔断器的额定电流I_N=稳态电流/0.75。
  Fuse designed to UL standard: Rated Current (I_N) = steady state current of circuit/0.75.

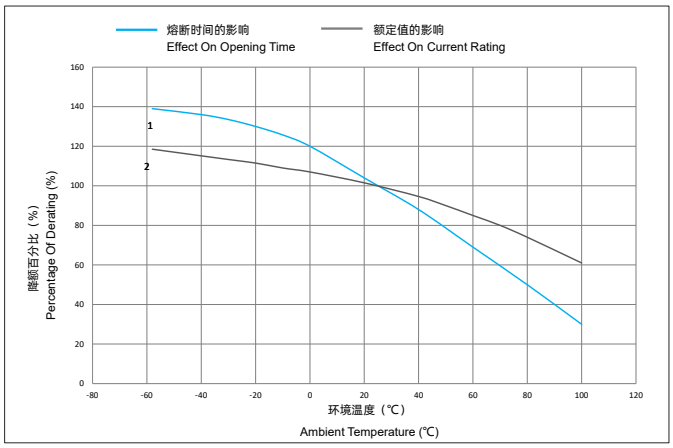

图1 FIGURE 1

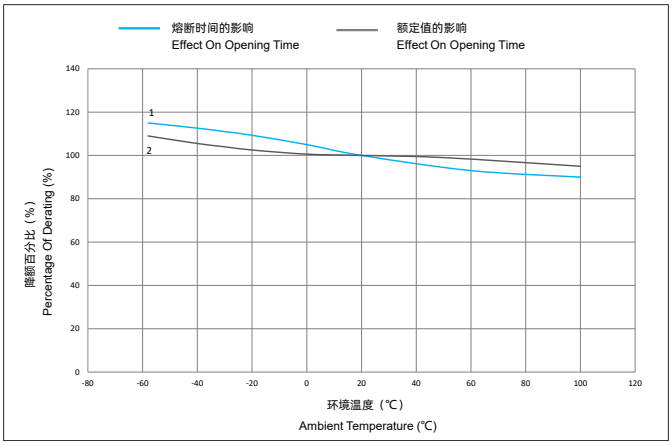

图2 FIGURE 2

环境温度 Ambient Temperature

熔断器的电流承载能力测试是在环境温度25 °C条件下进行的，而熔断器的电流承载能力是会受环境温度影响的。环境温度越高，熔断器的寿命越短，承载能力就越低。所以选用熔断器时应考虑熔断器周边的环境温度，环境温度对各类熔断器承载能力的影响如下图所示：

The current carrying capacity tests of a fuse are performed at 25 °C and will be effected by the changes of the ambient Temp.. The higher the ambient Temp. is, the shorter the fuse life time will be, and the lower the current carrying capacity will be. So the ambient Temp. shall be considered for proper fuse selection. Refer to the following charts showing its effect on the current carrying capacity of all kinds of fuse:

- 图1表示环境温度对传统慢断及中等慢断型熔断器承载能力及5I_N熔断时间的影响。
  Fig.1 effect on rating and opening time in 5I_N of traditional time-lag and medium Time-Lag fuse.
- 图2表示环境温度对快速熔断型熔断器承载能力及5I_N熔断时间的影响。
  Fig.2 effect on rating and opening time in 5I_N of fast acting fuse.

脉冲 Pulse

脉冲产生的热循环，从而产生机械疲劳影响熔断器的寿命。设计时应使脉冲I^2t远远小于熔断器标称熔化热能I^2t。熔断器寿命（可承受的脉冲循环次数）与U（脉冲I^2t值与熔断器I^2t值之比率）的关系参照表A。表B提供各种典型脉冲波形的I^2t值近似计算公式：

Pulse produces thermal cycling and mechanical fatigue which could affect the life time of fuse. The selected fuse should have an I^2t value much greater than the I^2t value of pulse. Refer to Table A showing the relationship between the life time of fuse (the endurable times of pulse shock) and U (ratio between pulse I^2t value and fuse I^2t value). The I^2t value of a fuse presented in this catalog may be for your reference. The I^2t value of a pulse can be approximated from the following formulas for a typical wave shape, refer to Table B.

Miniature Fuses

厦门赛尔特电子有限公司版权所有
All Rights Reserved by Xiamen SET Electronics Co., Ltd. 2021-2023 V2.1

表1 TABLE 1

可承受脉冲次数 Endurable times of pulse shock	U（比率Ratio）
100000	20%
10000	30%
1000	40%

注：脉冲间隔时间必须足够长（5 s – 10 s），以利于脉冲产生的热量散失。

Note: Adequate interval (5 s - 10 s) must be required between pulse events to allow the heat from the previous event to dissipate.

表2 TABLE 2

波形 Wave Shape	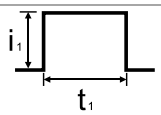 t_1 矩形波 Rectangle wave	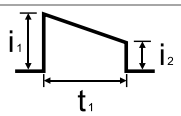 t_1 梯形波 Trapezoid wave	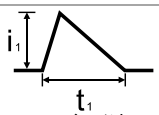 t_1 三角形波 Triangle wave	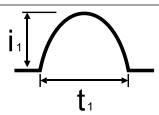 t_1 正弦波 Sine wave	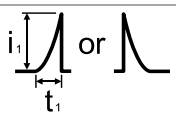 t_1 变形波 Distortion wave	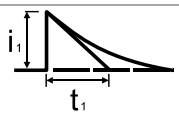 t_1 充、放电波 Charge or Discharge wave
I^2t计算公式 I^2t Formula	$i_1^2t_1$	$(1/3)(i_1^2+i_1i_2+i_2^2)t_1$	$(1/3)i_1^2t_1$	$(1/2)i_1^2t_1$	$(1/5)i_1^2t_1$	$(1/2)i_1^2t_1$

验证 Verifying

所选定的产品必须在实际被保护电路中进行测试，以验证所选择的熔断器。此验证应包括正常条件及故障条件下的测试，以确保所选择的熔断器在被保护电路中能正常运行。

The selected sample shall be tested in the actual circuit to verify the right selection. The testing should include the tests under normal and fault conditions to ensure that the fuse will operate properly in the circuit.

Miniature Fuses

厦门赛尔特电子有限公司版权所有
All Rights Reserved by Xiamen SET Electronics Co., Ltd. 2021-2023 V2.1

注意

ATTENTION

检测 Inspection

冷电阻测试 Cold Resistance Test

a. 环境温度为(23±2) °C，测试电流不大于熔断器额定电流的10%。

Applied current shall be less than 10% of rated current, at ambient Temp. of (23±2) °C.

b. 采用四端测试法 (4-Wire) Resistance Measurement.

使用 Usage

a. 通电情况下请勿直接触碰熔断器本体或引线，防止烫伤或触电。

Do not touch the fuse body or lead wire when power on, avoiding scald or electric shock.

b. 气压在80 kPa 到106 kPa，对应海拔为+2000 m至- 500 m。

Air pressure is 80 kPa to 106 kPa. These values represent an altitude of +2000 m to -500 m, respectively.

更换 Replacement

基于安全原因，熔断器是不可修复的产品，替换时应使用同类别同型号的产品。

For safety reasons, the Fuse is the non-resettable product, please ensure that the alternative Fuse is the same type when replace it.

贮存 Storage

熔断器的贮存应避免高温、高湿、日光直射和腐蚀性气体的场合，以免影响引脚可焊性，产品购入后请于1年内使用完毕。

Please store the fuse in the environment without high temperature, high humidity or corrosive gas, to avoid reducing the solderability of the lead wire. Please use them up within 1 year after receiving the goods.

厦门赛尔特电子有限公司版权所有
All Rights Reserved by Xiamen SET Electronics Co., Ltd. 2021-2023 V2.1

安装 Installation

机械应力 Mechanical stress

安装过程和安装后不宜对熔断器本体施加机械应力。

Do not apply mechanical stress to the fuse body during or after the installation.

焊接参数 Soldering Parameters

波峰焊参数 Wave soldering Parameters (仅供参考 For Reference Only)

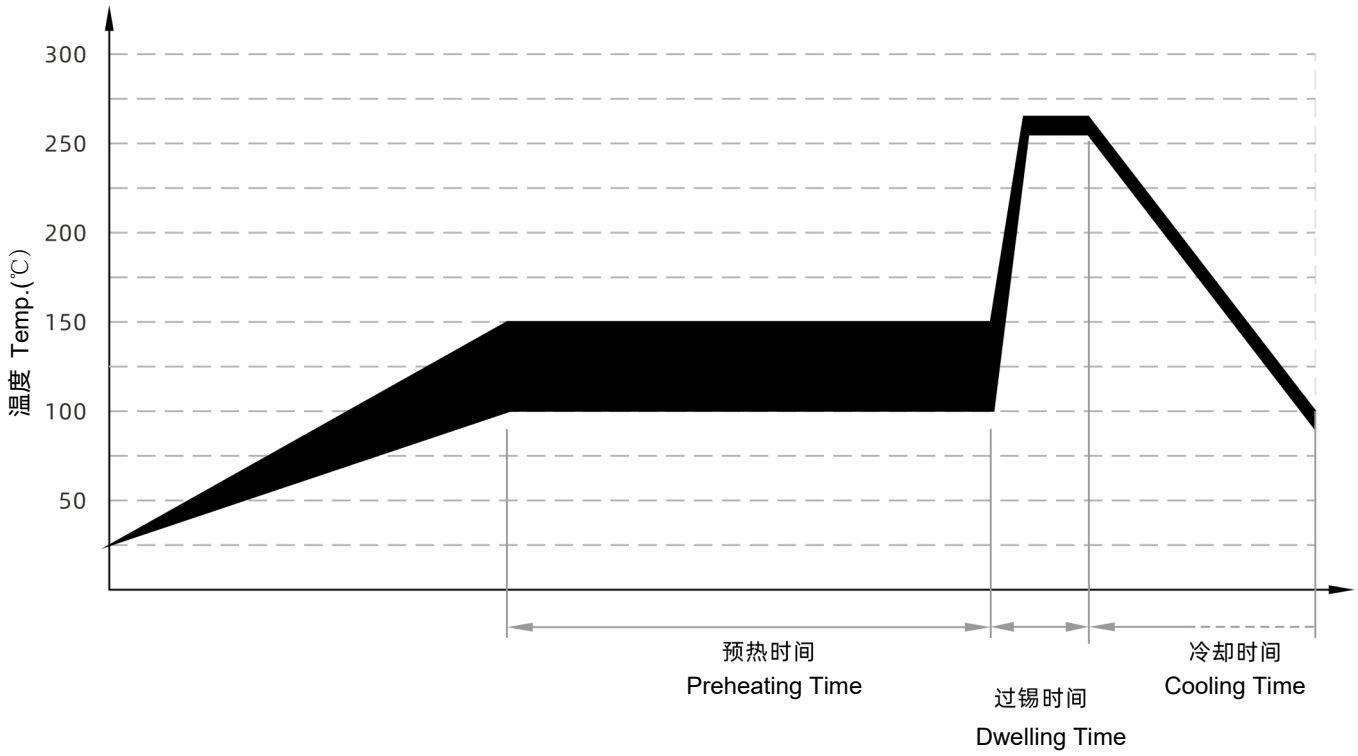

表3 TABLE 3

项目 Item	温度 Temp. （°C）	时间 Time （s）
预热 Preheating	100 - 150	60 - 180
过锡 Dwelling	255 - 265	4 - 8

推荐的手工焊参数 Recommended Soldering Parameters

烙铁温度 Solder Iron Temp.：(350 ± 5) ℃

焊接时间 Soldering Time：≤ 5 s

安装位置 Installation Position

勿将熔断器安装在可能经常出现剧烈振动的位置。

Do not install the fuse on a location that may often subject to severe continuous vibration.

厦门赛尔特电子有限公司版权所有
All Rights Reserved by Xiamen SET Electronics Co., Ltd. 2021-2023 V2.1

贴片熔断体
Surface Mount Fuse-links (SMFL)

SCF1032系列 Series,快断 Fast Acting,陶瓷管 Ceramic Tube

尺寸 Dimensions (mm)

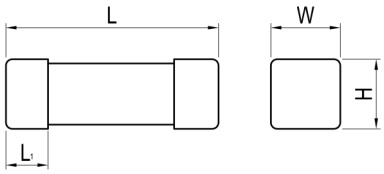

L	L_1	w	H
10.3 ± 0.3	2.0 ± 0.2	3.3 ± 0.2	3.3 ± 0.2

关键特性 Key Features

- 快断 Fast Acting
- SMD 保险丝 Fuse
- 执行标准：IEC 60127-7、UL248-14
  Designed to IEC 60127-7, UL248-14
- 无铅 Lead-free (Pb-free)
- 环保型产品 RoHS & REACH Compliant

应用 Applications

- 电源 Power Supply
- 家电 Household Appliance
- 通用照明 General Lighting
- 智能家居 Smart Home
- 办公设备 Office Equipment
- 电动工具 Electric Tool
- 家庭娱乐设备 Home Entertainment Equipment
- 医疗设备 Medical Equipment
- 仪器仪表 Instruments and Apparatuses

型号说明 Product Number System

SCF1032F1.6A250V

- 额定电压 Rated Voltage
- 额定电流 Rated Current
- 快断 Fast Acting
- 产品系列 Product Series

结构图 Structure

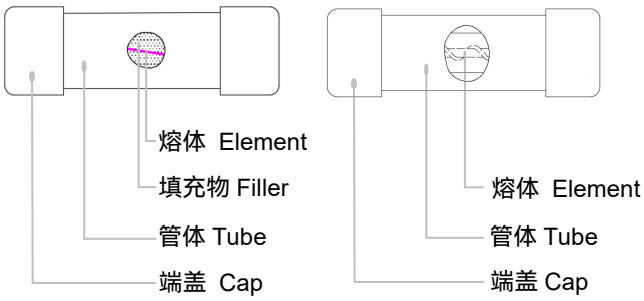

安规认证 Agency Approvals

安规认证 Agency Approvals	认证号 Agency File Number	电流范围 Ampere Range
c UL us	E345932	0.5 A ~ 40 A
TÜVRheinland	待定 Pending	0.5 A ~ 40 A
cec	待定 Pending	0.5 A ~ 40 A

时间电流特性曲线 Time Current Curve

仅供参考 For Reference Only

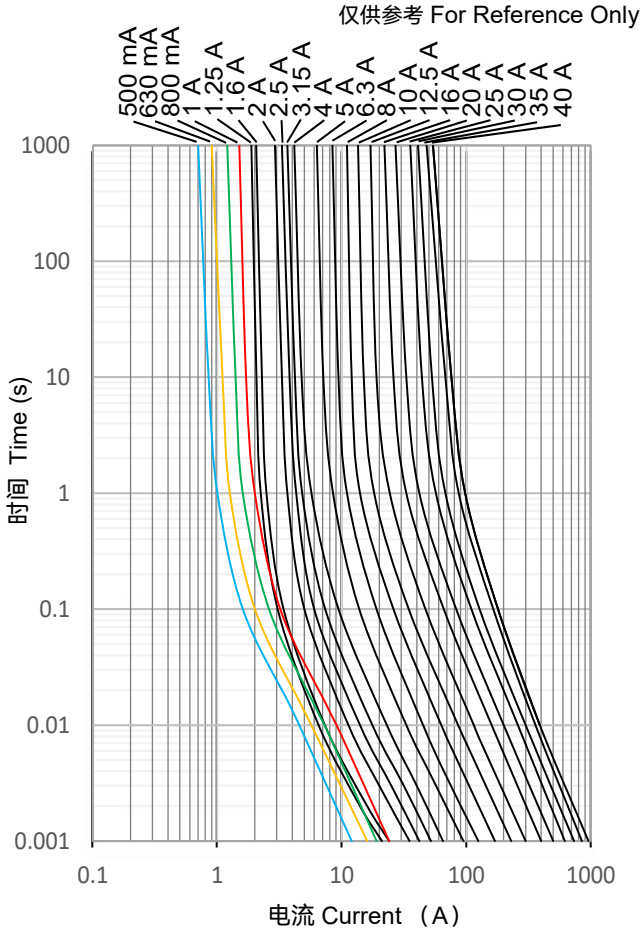

厦门赛尔特电子有限公司版权所有
All Rights Reserved by Xiamen SET Electronics Co., Ltd. 2021-2023 V2.1

Miniature Fuses

技术参数 Specifications

系列 Series	额定电流 Rated Current (A)	额定分断能力 Rated Breaking Capacity	熔化热能值 Typical Melting I^2t [a] (A²sec)	安规认证 Agency Approvals TUV	CQC	cURus	环境 Environmental RoHs	REACH
SCF1032	0.5	100 A@250 VAC 100 A@250 VDC 1000 A@125 VAC 1000 A@125 VDC / 75 VDC / 63 VDC / 48 VDC / 32 VDC	0.2	○	○	●	●	●
SCF1032	0.63		0.4	○	○	●	●	●
SCF1032	0.8		0.64	○	○	●	●	●
SCF1032	1		1.2	○	○	●	●	●
SCF1032	1.25		0.2	○	○	●	●	●
SCF1032	1.6		0.5	○	○	●	●	●
SCF1032	2		0.9	○	○	●	●	●
SCF1032	2.5		1.7	○	○	●	●	●
SCF1032	3		2.5			●	●	●
SCF1032	3.15		2.8	○	○	●	●	●
SCF1032	4		5.0	○	○	●	●	●
SCF1032	5		9.5	○	○	●	●	●
SCF1032	6.3		15	○	○	●	●	●
SCF1032	8		38	○	○	●	●	●
SCF1032	10		73	○	○	●	●	●
SCF1032	12		105			●	●	●
SCF1032	12.5		110	○	○	●	●	●
SCF1032	15		225			●	●	●
SCF1032	16		235	○	○	●	●	●
SCF1032	20		400	○	○	●	●	●
SCF1032	25	100 A@125 VAC 100 A@125 VDC	630	○	○	●	●	●
SCF1032	30		850	○	○	●	●	●
SCF1032	35		1200	○	○	●	●	●
SCF1032	40		1500	○	○	●	●	●

a：I^2t是在10倍额定电流测试下得到的。I^2t value is measured at 10 I_N.

○：待定 Pending

厦门赛尔特电子有限公司版权所有
All Rights Reserved by Xiamen SET Electronics Co., Ltd. 2021-2023 V2.1

熔断特性 Pre-arcing Time/Current Characteristic

额定电流 Rated Current	1.0 I_N	2.0I_N	10I_N
	最小 Min.	最大 Max.	最大 Max.
0.5 A ~ 40 A	4 hours	60 s	60 ms

包装信息 Packaging Information

尺寸 Dimensions (mm)

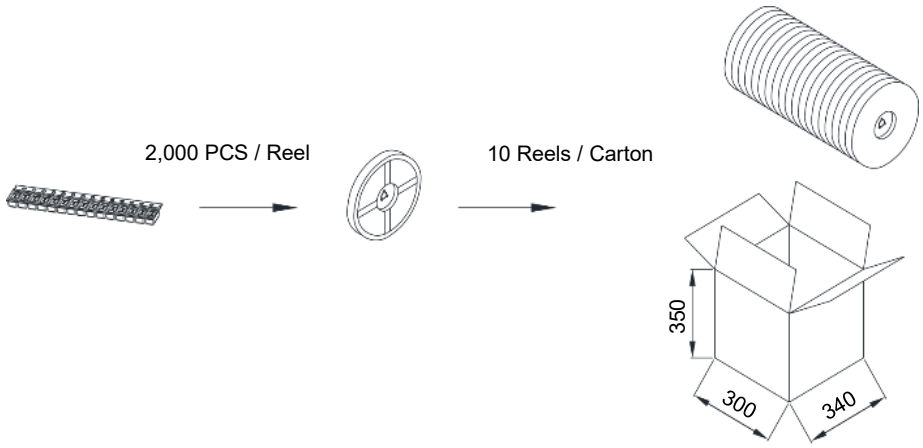

项目 Item	卷轴 Reel	箱 Carton
数量 Q'ty (PCS)	2,000	20,000
毛重 Gross Weight (kg)		9.0 ± 10%

Miniature Fuses

厦门赛尔特电子有限公司版权所有
All Rights Reserved by Xiamen SET Electronics Co., Ltd. 2021-2023 V2.1

贴片熔断体
Surface Mount Fuse-links (SMFL)

SCT1032系列 Series,慢断 Time-Lag,陶瓷管 Ceramic Tube

尺寸 Dimensions (mm)

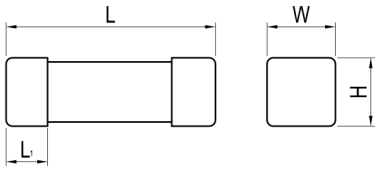

L	L_1	w	H
10.3 ± 0.3	2.0 ± 0.2	3.3 ± 0.2	3.3 ± 0.2

关键特性 Key Features

- 慢断 Time-Lag
- SMD 保险丝 Fuse
- 执行标准：IEC 60127-7、UL248-14
  Designed to IEC 60127-7, UL248-14
- 无铅 Lead-free (Pb-free)
- 环保型产品 RoHS & REACH Compliant

应用 Applications

- 电源 Power Supply
- 家电 Household Appliance
- 防雷器 SPD
- 通用照明 General Lighting
- 智能家居 Smart Home
- 办公设备 Office Equipment
- 电动工具 Electric Tool
- 家庭娱乐设备 Home Entertainment Equipment
- 医疗设备 Medical Equipment

型号说明 Product Number System

SCT1032T1.6A250V

- 额定电压 Rated Voltage
- 额定电流 Rated Current
- 慢断 Time-Lag
- 产品系列 Product Series

结构图 Structure

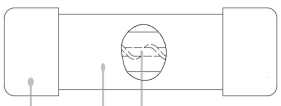

- 熔体 Element
- 管体 Tube
- 端盖 Cap

安规认证 Agency Approvals

安规认证 Agency Approvals	认证号 Agency File Number	电流范围 Ampere Range
c UL us	E345932	0.1 A ~ 15 A
TÜVRheinland	待定 Pending	0.1 A ~ 15 A
CQC	CQC22012330354 CQC22012331636	0.1 A ~ 5 A 6.3 A ~ 15 A

时间电流特性曲线 Time Current Curve

仅供参考 For Reference Only

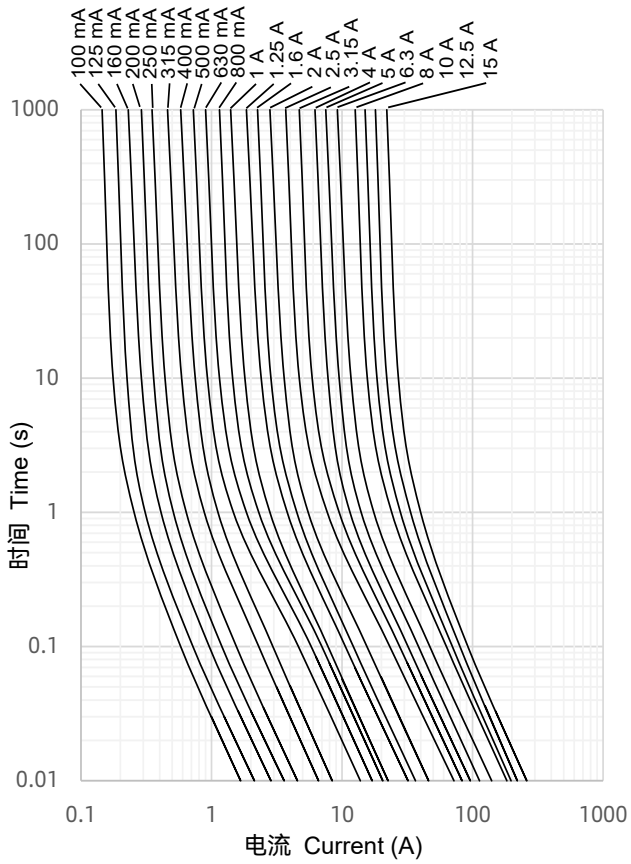

厦门赛尔特电子有限公司版权所有
All Rights Reserved by Xiamen SET Electronics Co., Ltd. 2021-2023 V2.1

Miniature Fuses

技术参数 Specifications

系列 Series	额定电流 Rated Current (A)	额定分断能力 Rated Breaking Capacity	熔化热能值 Typical Melting I^2t [a] (A²sec)	安规认证 Agency Approvals TUV	CQC	cURus	环境 Environmental RoHs	REACH
SCT1032	0.1	100 A@350 VAC / 300 VAC / 250 VAC / 125 VAC 1000 A@125 VAC 30 A@250 VDC 1000 A@125 VDC / 75 VDC / 63 VDC / 48 VDC / 32 VDC	0.018	○	●	●	●	●
SCT1032	0.125		0.03	○	●	●	●	●
SCT1032	0.16		0.04	○	●	●	●	●
SCT1032	0.2		0.1	○	●	●	●	●
SCT1032	0.25		0.15	○	●	●	●	●
SCT1032	0.315		0.48	○	●	●	●	●
SCT1032	0.4		0.8	○	●	●	●	●
SCT1032	0.5		2.0	○	●	●	●	●
SCT1032	0.63		3.2	○	●	●	●	●
SCT1032	0.8		4.5	○	●	●	●	●
SCT1032	1		5.5	○	●	●	●	●
SCT1032	1.25		10.2	○	●	●	●	●
SCT1032	1.6		14	○	●	●	●	●
SCT1032	2		23	○	●	●	●	●
SCT1032	2.5	100 A@350 VAC / 300 VAC / 250 VAC / 125 VAC 1000 A@125 VAC 1000 A@125 VDC / 75 VDC / 63 VDC / 48 VDC / 32 VDC	52	○	●	●	●	●
SCT1032	3		72			●	●	●
SCT1032	3.15		75	○	●	●	●	●
SCT1032	4		118	○	●	●	●	●
SCT1032	5		197	○	●	●	●	●
SCT1032	6.3		210	○	●	●	●	●
SCT1032	7		290			●	●	●
SCT1032	8		400	○	●	●	●	●
SCT1032	10		445	○	●	●	●	●
SCT1032	12		550			●	●	●
SCT1032	12.5		555	○	●	●	●	●
SCT1032	15		740	○	●	●	●	●

a: I^2t是在10倍额定电流测试下得到的。I^2t value is measured at 10 I_N.

○: 待定 Pending

厦门赛尔特电子有限公司版权所有
All Rights Reserved by Xiamen SET Electronics Co., Ltd. 2021-2023 V2.1

Miniature Fuses

熔断特性 Pre-arcing Time/Current Characteristic

额定电流 Rated Current	1.0 I_N	2.0I_N	10I_N	
	最小 Min.	最大 Max.	最小 Min.	最大 Max.
0.1 A ~ 15 A	4 h	60 s	10 ms	100 ms

包装信息 Packaging Information

尺寸 Dimensions (mm)

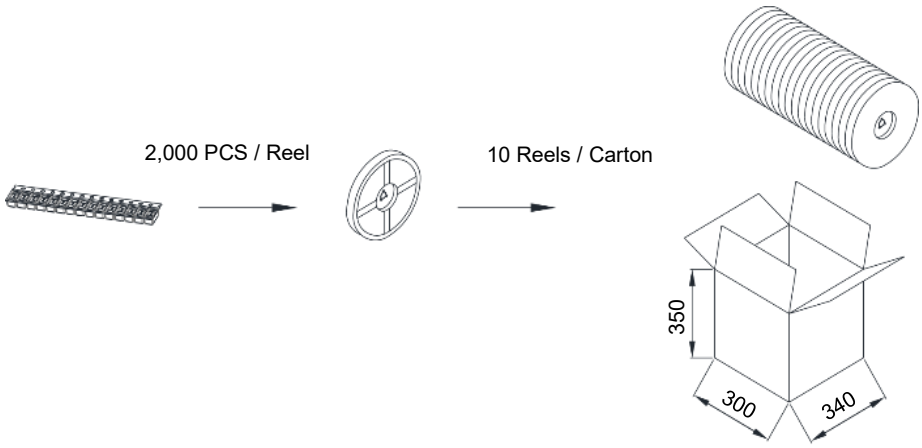

项目 Item	卷轴 Reel	箱 Carton
数量 Q'ty (PCS)	2,000	20,000
毛重 Gross Weight (kg)		8.6 ± 10%

Miniature Fuses

厦门赛尔特电子有限公司版权所有
All Rights Reserved by Xiamen SET Electronics Co., Ltd. 2021-2023 V2.1

贴片熔断体
Surface Mount Fuse-links (SMFL)

SCF6125系列 Series,快断 Fast Acting,陶瓷管 Ceramic Tube

尺寸 Dimensions (mm)

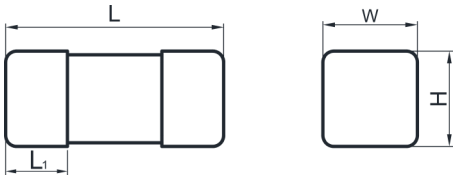

L	L_1	w	H
6.3 ± 0.3	1.7 ± 0.2	2.70 ± 0.25	2.70 ± 0.25

关键特性 Key Features

- 快断 Fast Acting
- SMD 保险丝 Fuse
- 执行标准：IEC 60127-7、UL248-14
  Designed to IEC 60127-7, UL248-14
- 无铅 Lead-free (Pb-free)
- 环保型产品 RoHS & REACH Compliant

安规认证 Agency Approvals

安规认证 Agency Approvals	认证号 Agency File Number	电流范围 Ampere Range
c UL us	E345932	0.5 A ~ 20 A
TÜVRheinland	待定 Pending	0.5 A ~ 20 A
cec	待定 Pending	0.5 A ~ 20 A

应用 Applications

- 电源 Power Supply
- 家电 Household Appliance
- 通用照明 General Lighting
- 智能家居 Smart Home
- 办公设备 Office Equipment
- 电动工具 Electric Tool
- 家庭娱乐设备 Home Entertainment Equipment
- 医疗设备 Medical Equipment
- 仪器仪表 Instruments and Apparatuses

时间电流特性曲线 Time Current Curve

仅供参考 For Reference Only

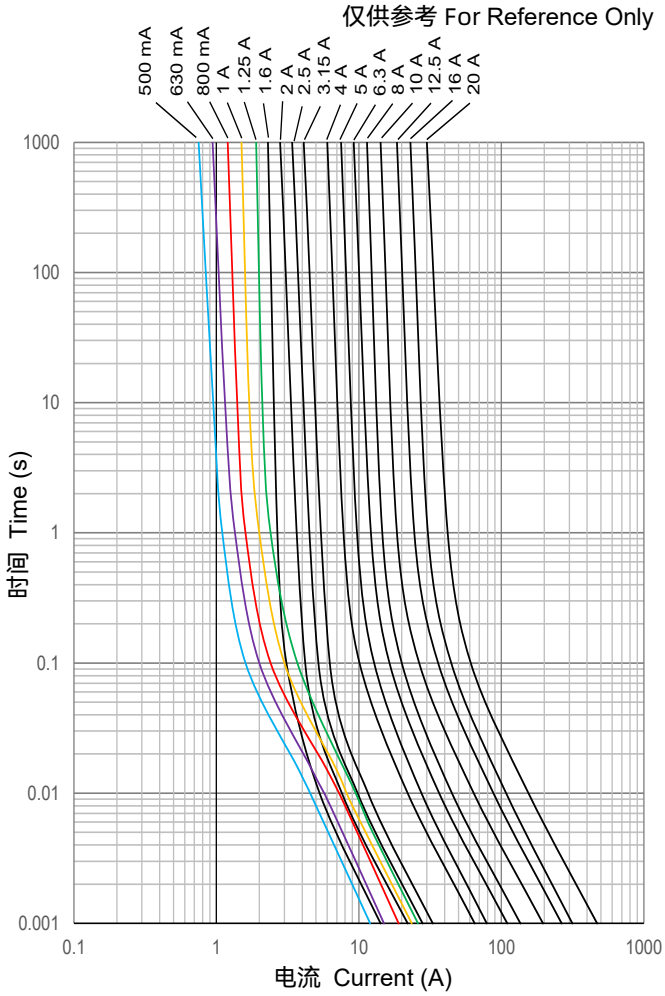

型号说明 Product Number System

SCF6125F1.6A250V

- 额定电压 Rated Voltage
- 额定电流 Rated Current
- 快断 Fast Acting
- 产品系列 Product Series

结构图 Structure

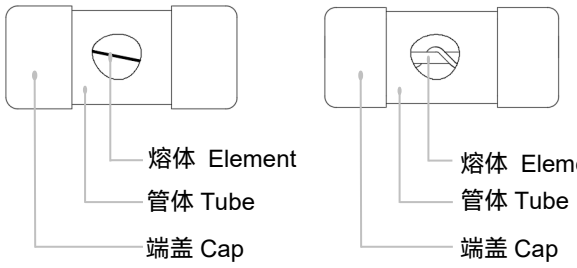

厦门赛尔特电子有限公司版权所有
All Rights Reserved by Xiamen SET Electronics Co., Ltd. 2021-2023 V2.1

Miniature Fuses

技术参数 Specifications

系列 Series	额定电流 Rated Current (A)	额定分断能力 Rated Breaking Capacity	平均熔化热能值 Average Typical Melting I^2t [a] (A²sec)	安规认证 Agency Approvals TUV	CQC	UL/CUL	环境 Environmental RoHS	REACH
SCF6125	0.5	50 A@250 VAC 200 A@125 VAC 200 A@125 VDC 500 A@75 VDC / 63 VDC / 48 VDC / 32 VDC / 24 VDC	0.25	○	○	●	●	●
SCF6125	0.63		0.32	○	○	●	●	●
SCF6125	0.8		0.77	○	○	●	●	●
SCF6125	1		0.8	○	○	●	●	●
SCF6125	1.25		0.78	○	○	●	●	●
SCF6125	1.6		1.28	○	○	●	●	●
SCF6125	2		3.2	○	○	●	●	●
SCF6125	2.5		0.85	○	○	●	●	●
SCF6125	3		0.9			●	●	●
SCF6125	3.15		1.1	○	○	●	●	●
SCF6125	4		4.5	○	○	●	●	●
SCF6125	5		6.3	○	○	●	●	●
SCF6125	6.3		12.4	○	○	●	●	●
SCF6125	8		19.2	○	○	●	●	●
SCF6125	10		40	○	○	●	●	●
SCF6125	12.5		75	○	○	●	●	●
SCF6125	15		90			●	●	●
SCF6125	16		102	○	○	●	●	●
SCF6125	20		240	○	○	●	●	●

a: I^2t是在10倍额定电流测试下得到的。I^2t value is measured at 10 I_N.

○: 待定 Pending

Miniature Fuses

厦门赛尔特电子有限公司版权所有
All Rights Reserved by Xiamen SET Electronics Co., Ltd. 2021-2023 V2.1

熔断特性 Pre-arcing Time/Current Characteristic

额定电流 Rated Current	1.0 I_N	2.0I_N	10I_N
	最小 Min.	最大 Max.	最大 Max.
0.5 A ~ 20 A	4 h	5 s	10 ms

包装信息 Packaging Information

尺寸 Dimensions (mm)

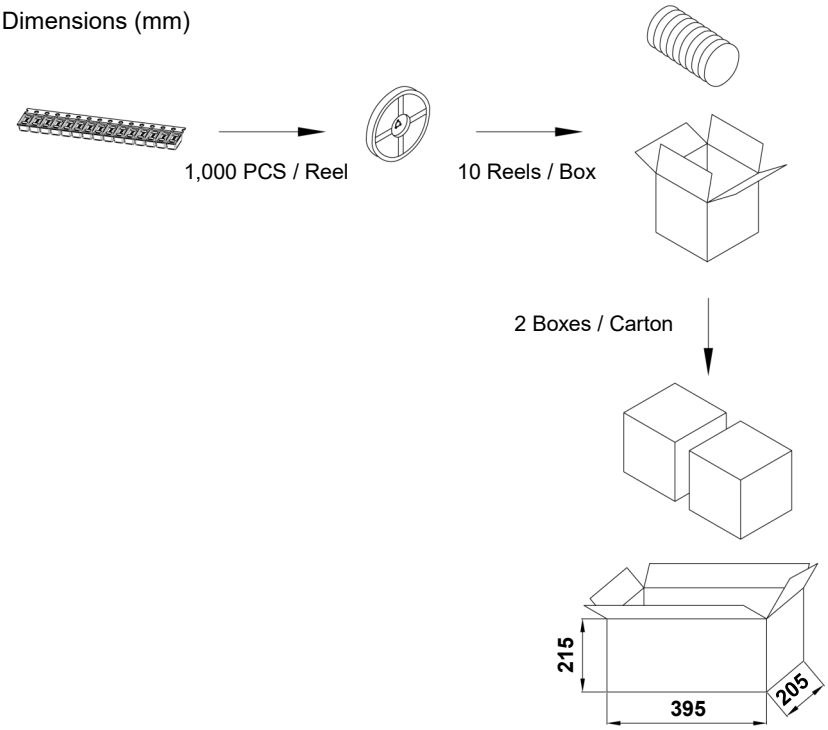

项目 Item	卷轴 Reel	盒 Box	箱 Carton
数量 Q'ty (PCS)	1,000	10,000	20,000
毛重 Gross Weight (kg)		4.7 ± 10%	

Miniature Fuses

厦门赛尔特电子有限公司版权所有
All Rights Reserved by Xiamen SET Electronics Co., Ltd. 2021-2023 V2.1

贴片熔断体
Surface Mount Fuse-links (SMFL)

SCT6125系列 Series,慢断 Time-Lag,陶瓷管 Ceramic Tube

尺寸 Dimensions (mm)

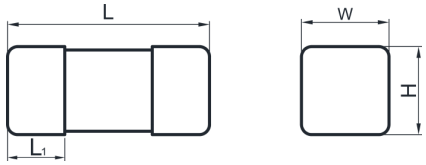

L	L_1	w	H
6.3 ± 0.3	1.7 ± 0.2	2.70 ± 0.25	2.70 ± 0.25

关键特性 Key Features

- 慢断 Time-Lag
- SMD 保险丝 Fuse
- 执行标准：IEC 60127-7、UL248-14
  Designed to IEC 60127-7, UL248-14
- 无铅 Lead-free (Pb-free)
- 环保型产品 RoHS & REACH Compliant

应用 Applications

- 电源 Power Supply
- 家电 Household Appliance
- 通用照明 General Lighting
- 智能家居 Smart Home
- 办公设备 Office Equipment
- 电动工具 Electric Tool
- 家庭娱乐设备 Home Entertainment Equipment
- 医疗设备 Medical Equipment
- 仪器仪表 Instruments and Apparatuses

型号说明 Product Number System

SCT6125T1.6A250V

- 额定电压 Rated Voltage
- 额定电流 Rated Current
- 慢断 Time-Lag
- 产品系列 Product Series

结构图 Structure

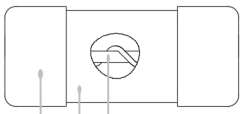

- 熔体 Element
- 管体 Tube
- 端盖 Cap

安规认证 Agency Approvals

安规认证 Agency Approvals	认证号 Agency File Number	电流范围 Ampere Range
c UL us	E345932	0.2 A ~ 12.5 A
TÜVRheinland	待定 Pending	0.2 A ~ 12.5 A
CQC	CQC22012331770 CQC22012331771 CQC22012331772	0.2 A ~ 12.5 A

时间电流特性曲线 Time Current Curve

仅供参考 For Reference Only

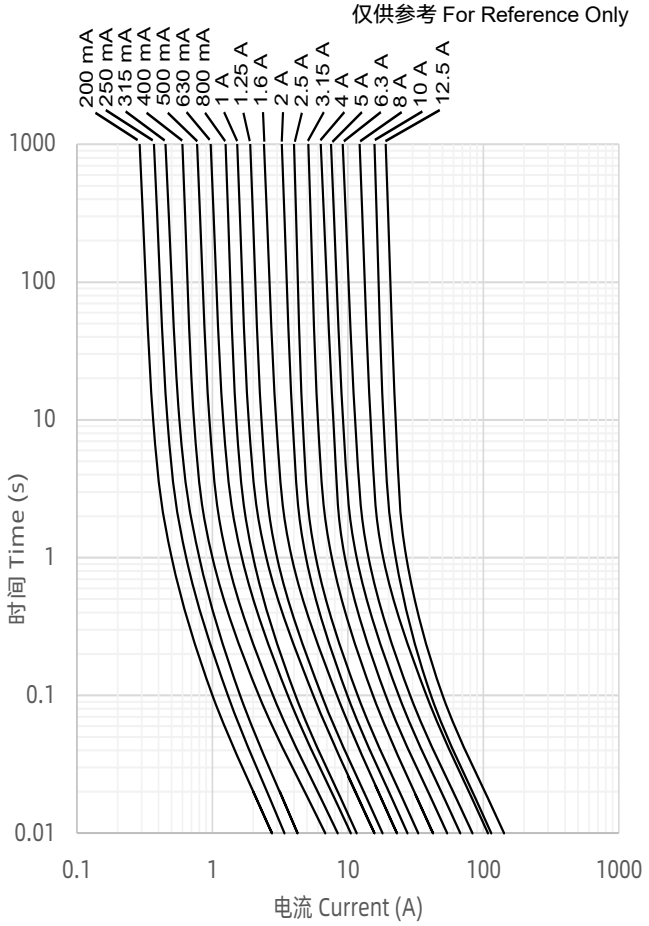

厦门赛尔特电子有限公司版权所有
All Rights Reserved by Xiamen SET Electronics Co., Ltd. 2021-2023 V2.1

Miniature Fuses

技术参数 Specifications

系列 Series	额定电流 Rated Current (A)	额定分断能力 Rated Breaking Capacity	平均熔化热能值 Average Typical Melting I^2t [a] (A²sec)	安规认证 Agency Approvals TUV	CQC	UL/CUL	环境 Environmental RoHS	REACH
SCT6125	0.2	35 A@350 VAC / 300 VAC / 250 VAC / 125 VAC 50 A@250 VAC / 125 VAC 500 A@125 VAC 500 A@125 VDC 1000 A@75 VDC / 63 VDC / 48 VDC / 32 VDC	0.06	○	●	●	●	●
SCT6125	0.25		0.11	○	●	●	●	●
SCT6125	0.315		0.23	○	●	●	●	●
SCT6125	0.4		0.45	○	●	●	●	●
SCT6125	0.5		0.7	○	●	●	●	●
SCT6125	0.63		1.3	○	●	●	●	●
SCT6125	0.8		1.4	○	●	●	●	●
SCT6125	1		2.5	○	●	●	●	●
SCT6125	1.25		3.4	○	●	●	●	●
SCT6125	1.6		5.5	○	●	●	●	●
SCT6125	2		10.4	○	●	●	●	●
SCT6125	2.5		20	○	●	●	●	●
SCT6125	3.15		22	○	●	●	●	●
SCT6125	4		43	○	●	●	●	●
SCT6125	5		55	○	●	●	●	●
SCT6125	6.3	50 A@250 VAC / 125 VAC 500 A@125 VAC 500 A@125 VDC 1000 A@75 VDC / 63 VDC / 48 VDC / 32 VDC	87.3	○	●	●	●	●
SCT6125	7		95			●	●	●
SCT6125	8		140.8	○	●	●	●	●
SCT6125	10		220	○	●	●	●	●
SCT6125	12		206			●	●	●
SCT6125	12.5		205	○	●	●	●	●

a: I^2t是在10倍额定电流测试下得到的。I^2t value is measured at 10 I_N.

○: 待定 Pending

厦门赛尔特电子有限公司版权所有
All Rights Reserved by Xiamen SET Electronics Co., Ltd. 2021-2023 V2.1

熔断特性 Pre-arcing Time/Current Characteristic

额定电流 Rated Current (A)	1.0 I_N	2.0I_N	10I_N	
	最小 Min.	最大 Max.	最小 Min.	最大 Max.
0.2 to 12.5	4 h	60 s	10 ms	100 ms

包装信息 Packaging Information

尺寸 Dimensions (mm)

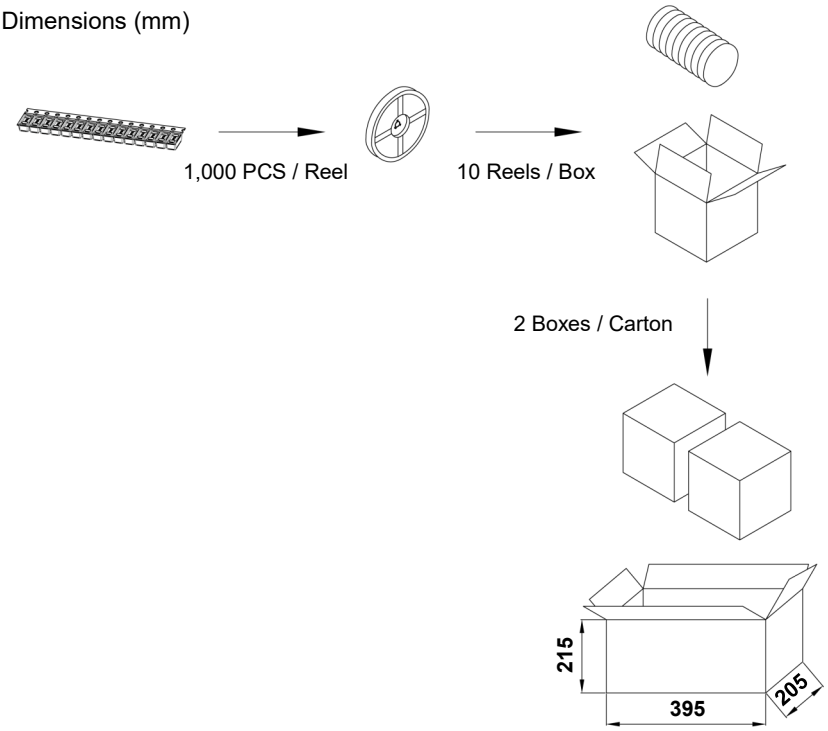

项目 Item	卷轴 Reel	盒 Box	箱 Carton
数量 Q'ty (PCS)	1,000	10,000	20,000
毛重 Gross Weight (kg)		4.7 ± 10%	

Miniature Fuses

厦门赛尔特电子有限公司版权所有
All Rights Reserved by Xiamen SET Electronics Co., Ltd. 2021-2023 V2.1

www.SETsafe.com
www.SETfuse.com

20+

OVER 20 YEARS OF DESIGNING, MANUFACTURING AND SELLING OF CIRCUIT PROTECTION COMPONENTS
超过20年的设计、制造、销售电路保护元器件

40+

SOLD TO MORE THAN 40 COUNTRIES AND REGIONS
40多个国家和地区的客户选择赛尔特品牌

自动化

AUTOMATIC PROCESS PRODUCTION
自动化工序生产

500

A BRAND CHOSEN BY FORTUNE 500 COMPANIES
世界500强企业选择品牌

厦门火炬高新区（翔安）产业区翔安西路8067, 8001号
NO. 8067, 8001 West Xiang'an Road,Torch High-tech industrial District, Xiang'an 361101 Xiamen P.R. China
www.SETsafe.com www.SETfuse.com
+ 86 592-5715-838 sales@SETfuse.com

厦门赛尔特电子有限公司版权所有
All Rights Reserved by Xiamen SET Electronics Co., Ltd. V2.0 2021-2023

SET safe | SET fuse
赛尔特